Evans CFOS/PCW/UHP Manifolds

New Standard for Semiconductor, Hyperscale Data Centers, & Advanced Manufacturing Installations

Evans Manifolds

- Manifold POC configurations available with ball valves, diaphragm and bellows valves
- Custom EOL (end of line) configurations according to customer specifications
- Individual Spool (main line) lengths up to 24' (7.3m) and diameters up to NPS 12
- 100% helium leak tested and certified
- Complete QA/QC documentation package
- "Weld free" CFOS grade manifold installs using Proprietary Evans Presslok joining system

CFOS/PCW/UHP Manifolds

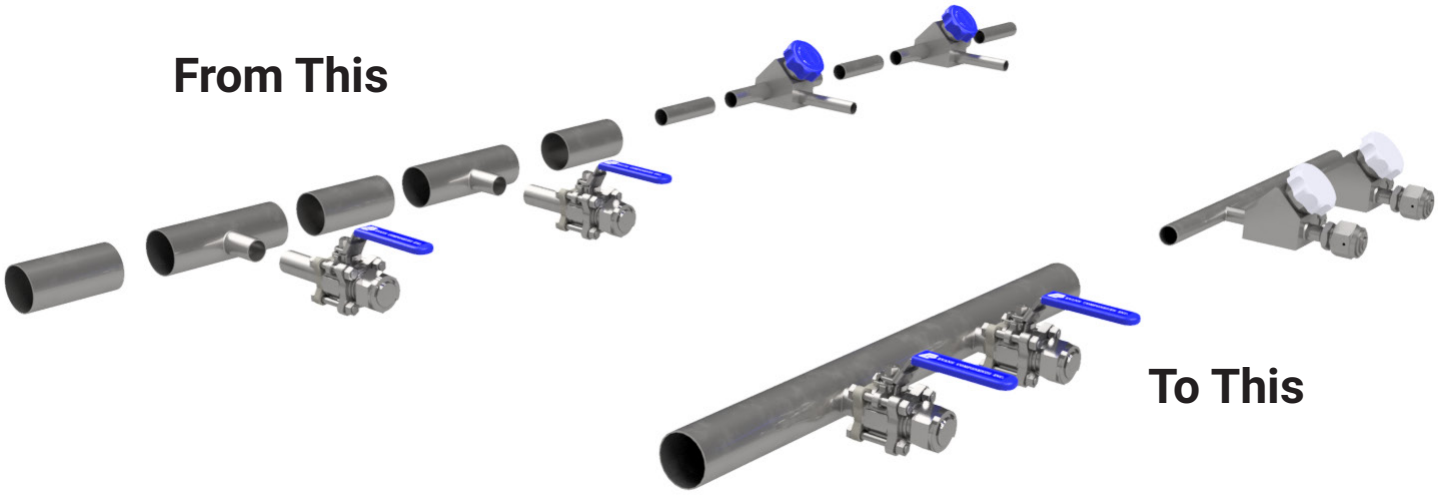

Do away with traditional stick-built laterals using Evans innovative "pulled tee" manifolds. Eliminate up to 3 welds per POC (point of connection) vs. using traditional reducing tees. Reduce costs in excess of 30-40% when using pulled tee diaphragm valves vs. block valves for UHP manifolds.

Industry Leader

Evans Components first introduced pre-fabricated CFOS/PCW manifolds to the Semiconductor Industry back in 1998. Our high-quality ball valves, sophisticated weld technology and proprietary lube-free pulled tee tooling have been in use for over 20-yrs. These high quality, lower cost pulled-tee manifolds have become an industry standard.

Evans has the largest installed base on the market. We perform every step of the manufacturing process to ensure the same consistent quality our customers have come to expect. Each manifold is 100% helium leak tested to ensure trouble-free installation.

Improved Quality

- Reduced number of lateral seam welds
- Decreased particle contamination due to reduction of the number of cutting/facing and welding operations
- Manufacture in a controlled environment
- Complete QA/QC documentation package
- Individual spools are marked and labeled per site specifications
- Faster particle/moisture system qualification

Reduced Costs

- Overhead reductions in QA/QC, cutting, facing, welding and prep activities
- Produced in a controlled environment
- "Weld free"installation of CFOS grade laterals using Evans proprietary Presslok tube joining system
- Reduced on-site gas consumption for welding, testing & blow down
- Reduced material handling
- Reduction of on-site critical skilled labor time and total time for installation

Evans Components Inc.
7606 SW Bridgeport Road, Portland, OR 97224 USA
Phone 971.249.1600 | Fax 971.249.1601
www.evanscomponents.com

EVANS COMPONENTS

Standardized Spool Laterals

- Equally spaced poc
- Standardized spool + lateral lengths
- Standardized EOL design
- Standard loosely shipped components
- PCW optional loosely shipped components:
  - AV-1 Vent
  - BA-7 Valve
  - Loopline FLowmeter

  (Evans does not build loopline or vent + drain, only supply certain components to fit in field for Standard Laterals)
- UHP EOL loosely shipped components:
  - Check Valve (102857-01)
  - RFO Gasket (100284-32)

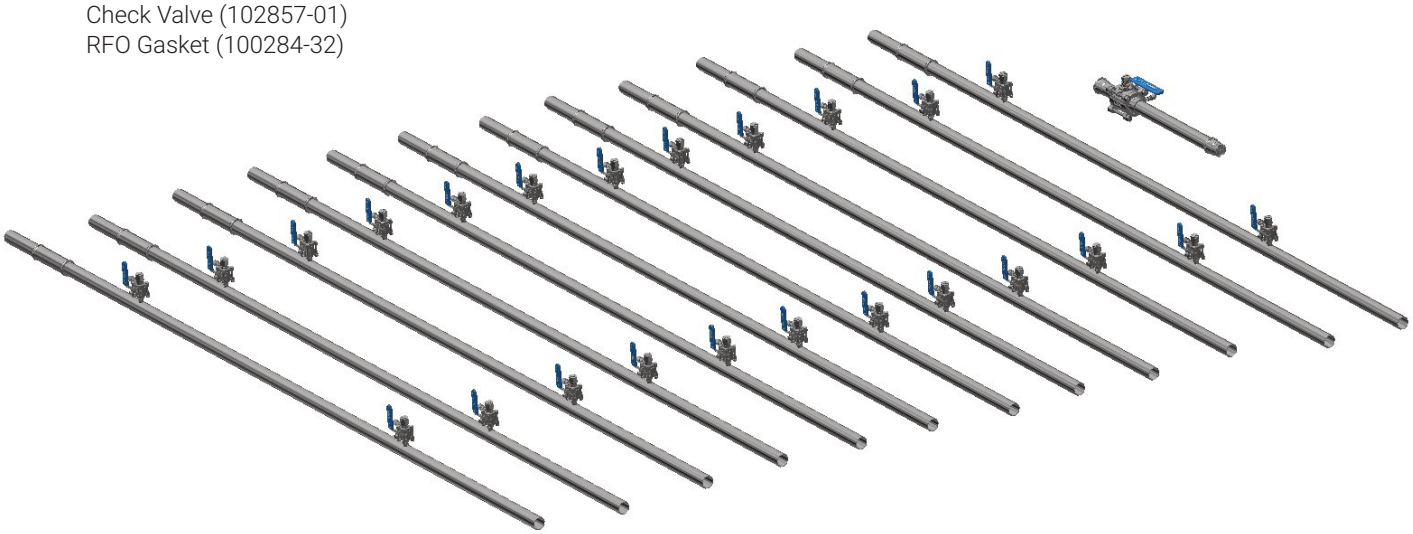

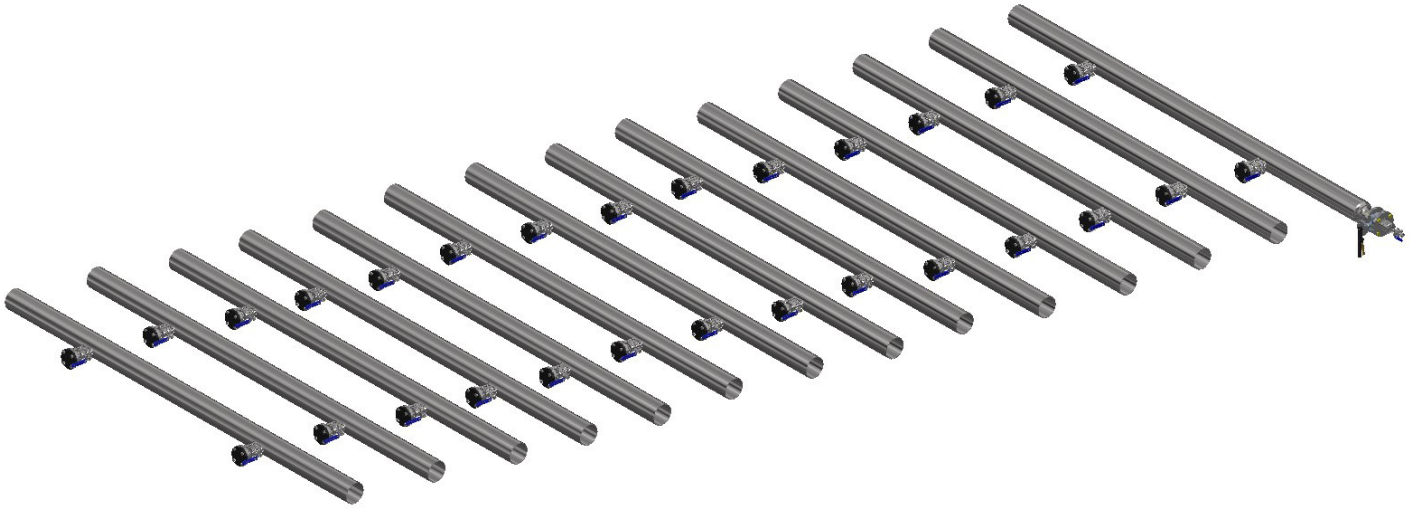

Evans Components Inc.
7606 SW Bridgeport Road, Portland, OR 97224 USA
Phone 971.249.1600 | Fax 971.249.1601
www.evanscomponents.com

EVANS COMPONENTS

Standardized Spool Spacing

8’ Long SHC1

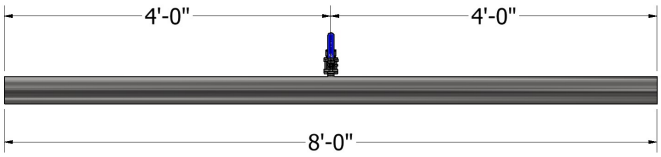

12’ Long SHC1

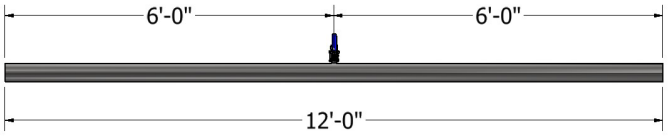

8’ Long SHC2

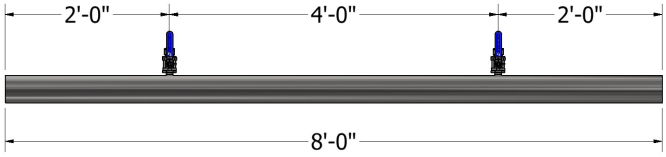

12’ Long SHC2

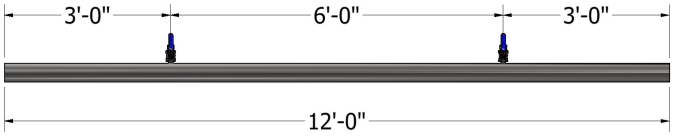

8’ Long SHC3

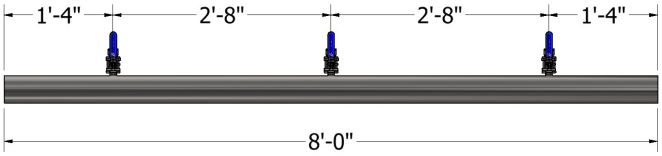

12’ Long SHC3

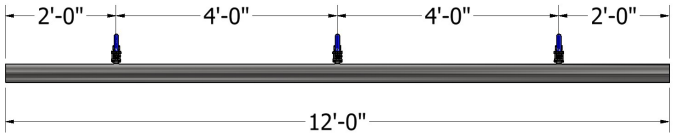

8’ Long SHC4

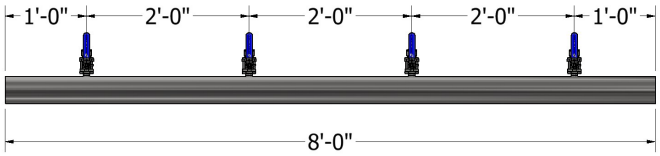

12’ Long SHC4

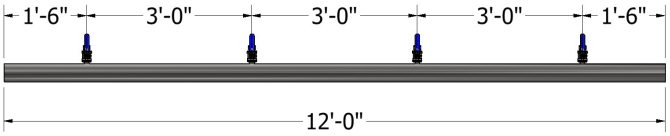

Evans Components Inc.
7606 SW Bridgeport Road, Portland, OR 97224 USA
Phone 971.249.1600 | Fax 971.249.1601
www.evanscomponents.com

EVANS COMPONENTS

PCW (Process Cooling Water) Manifolds

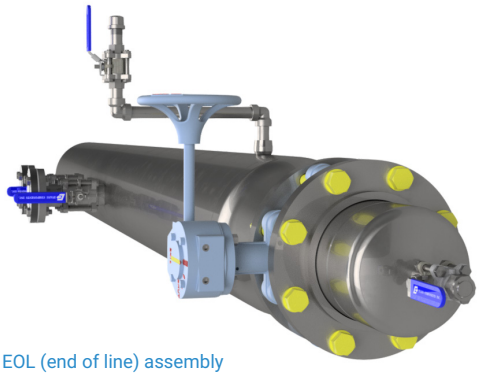

Typical EOL (end of line) assembly

PCW Applications

Process Cooling Water (PCW), Advanced Lithography Process Cooling Water (ALPCW), Chill Water (CW), Potable Water (PW), Industrial Water (IW)

Benefits & Features

- Built using Evans "full ported" high quality PW Series valves
- Manifolds are 100% helium leak tested to 1 x 10-7 atm scc/sec
- Minimized "dead leg" volume between main pipe and branch connection
- Complete QA/QC documentation package
- Pipe is solution annealed and meets ASTM A312-15 & ASME SA312-13, pipe is pickled & passivated per ASTM A380-06
- Fully welded, assembled & tested manifold assemblies conform to ANSI B31.1 & B31.3
- Quality production is assured by following stringent work procedures and processes developed for all aspects of the manufacturing processes
- 30% - 40% Cost Savings vs. traditional stick-built systems

Spool/Manifold Configurations

- Main run lengths up to 24ft (7m), and diameters up to NPS 12 (300mm)
- Manifold assemblies fully traceable and individually marked with customer specified markings and standard part number
- Branch valve (POC) sizes up to 6"
- Available with 304L or 316L stainless ASTM tube or SCH 10S pipe (JEA)
- Custom EOL (end of line) assemblies inclusive of butterfly valves, high point vent & drain connections, & loop line with flowmeter

Specifications & Design Rules

- Maximum Valve Pressure Rating: 1000 psi (68 bar) @ 100° F (38° C)
- Maximum Pressure Rating ANSI 150lb. Flange Connection : 275 psi (19 bar)
- Temperature Rating: -20° F (-29° C) to 375° F (190° C)
- POC (point of connection) / valve alignment +/- 1 degree
- Minimum valve spacing between POC's 12" (300mm)
- Minimum POC distance from end of pipe is 12" (300mm)
- Dimensional tolerance +/- 0.25" (6.35mm)

Evans Components Inc.
7606 SW Bridgeport Road, Portland, OR 97224 USA
Phone 971.249.1600 | Fax 971.249.1601
www.evanscomponents.com

EVANS COMPONENTS

PCW Complete Lateral Part Number Matrix

EXAMPLE: CPWR - 32 - 64 SHC6 G U - 12 - 144 - KE - SS
1 - 2 - 3 4 5 6 - 7 - 8 - 9 - 10

Above part number describes a CPWR Lateral 4" 304L main pipe beveled to knife edge 144 ft. long with 12' long spools, 6 each 2" stainless ball valves, 2" ANSI 150# flange valve outlet connection, standard spools.

1. System Type Designator
Example: CPWR, CPWS, PWR, PWS, ALPWR, ALPWS, etc...

2. Valve Size

08 - 1/2"	24 - 1-1/2"	48 - 3"
12 - 3/4"	32 - 2"	64 - 4"
16 - 1"	40 - 2-1/2"	96 - 6"

3. Main Size Designator

24 - 1-1/2"	64 - 4"	192 - 12"
32 - 2"	96 - 6"	224 - 14"
40 - 2-1/2"	128 - 8"	256 - 16"
48 - 3"	160 - 10"	

4. Valve Assembly Pattern Designator
SHC* - Single Horizontal Cross
SHC90* - Single Horizontal Cross with Rotated Valve
DHC* - Double Horizontal Cross
DEHT* - Double Horizontal Tee
DEVT* - Double Vertical Tee

Manifold Assemblies**
** - Insert number designator indicating total quantity of valves required for manifold. (Example: DHC6, Double Horizontal Cross pattern, 6 valves)

5. Main Pipe Connection Designator
G - 304L SCH10 Pipe Main
L - 316L SCH10 Pipe Main

6. Valve Outlet Connection Designator
M - 316L SS Tube Extension
W - 304L SS Tube Extension
U - 304L ANSI 150# Flange
UP - 304L ANSI 150# Flange w/ PVC Blind Flange
US - 304L ANSI 150# Flange w/ SS Blind Flange
T - 316L Tube Extension with Weld Cap
PLE - Presslok Tube Size Fitting
PLTEP - Removeable Presslok Cap (1-1/2" & 2" size options)

7. Individual Spool Length
6 - 6 FT Long Spools
8 - 8 FT Long Spools
10 - 10 FT Long Spools
12 - 12 FT Long Spools
20 - 20 FT Long Spools
24 - 24 FT Long Spools
(Other spool lengths available upon request)

8. Length of Lateral in Feet
* - Insert number designator indicating total length of lateral in feet. (Example: CPWR-32-64SHC6GU-12-144-BV, lateral assembly 144' long, beveled spool ends)

9. Pipe Designator Spool End Prep Options
KE - Pipe Main Beveled to Knife Edge
BV - Pipe Main Beveled Ends w/ landing (customer specified)
SQ - Pipe Main Square Cut/Face Ends

10. Standardized Option
SS - Standardized Spool with Equally Spaced Valves

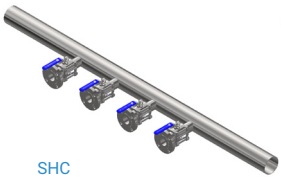
SHC

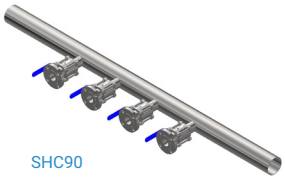
SHC90

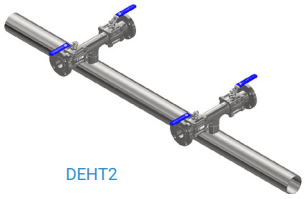
DEHT2

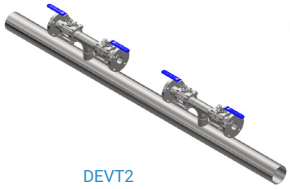
DEVT2

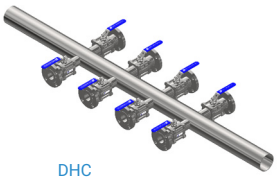
DHC

Evans Components Inc.
7606 SW Bridgeport Road, Portland, OR 97224 USA
Phone 971.249.1600 | Fax 971.249.1601
www.evanscomponents.com

PCW Individual Spool Part Number Matrix

EXAMPLE: CPWR - 32 - 64 SHC2 G U - 12S - KE - SS - __
1 - 2 - 3 4 5 6 - 7 - 8 - 9 - 10

Above part number describes a CPWR Lateral 4" 304L main pipe beveled to knife edge 12' long, 2 each 2" stainless ball valves, 2" ANSI 150# flange valve outlet connection, standard spool.

1. System Type Designator
Example: CPWR, CPWS, PWR, PWS, ALPWR, ALPWS, etc...

2. Valve Size

08 - 1/2"	24 - 1-1/2"	48 - 3"
12 - 3/4"	32 - 2"	64 - 4"
16 - 1"	40 - 2-1/2"	96 - 6"

3. Main Size Designator

24 - 1-1/2"	64 - 4"	192 - 12"
32 - 2"	96 - 6"	224 - 14"
40 - 2-1/2"	128 - 8"	256 - 16"
48 - 3"	160 - 10"	

4. Valve Assembly Pattern Designator
SHC* - Single Horizontal Cross
SHC90* - Single Horizontal Cross with Rotated Valve
DHC* - Double Horizontal Cross
DEHT* - Double Horizontal Tee
DEVT* - Double Vertical Tee

Manifold Assemblies**
** - Insert number designator indicating total quantity of valves required for spool. (Example: DHC4, Double Horizontal Cross pattern, 4 valves)

5. Main Pipe Connection Designator
G - 304L SCH10 Pipe Main
L - 316L SCH10 Pipe Main

6. Valve Outlet Connection Designator
M - 316L SS Tube Extension
W - 304L SS Tube Extension
U - 304L ANSI 150# Flange
UP - 304L ANSI 150# Flange w/ PVC Blind Flange
US - 304L ANSI 150# Flange w/ SS Blind Flange
T - 316L Tube Extension with Weld Cap
PLE - Presslok Tube Size Fitting
PLTEP - Removeable Presslok Cap (1-1/2" & 2" size options)

7. Individual Spool Length
6S - 6 FT Long Spool
8S - 8 FT Long Spool
10S - 10 FT Long Spool
12S - 12 FT Long Spool
20S - 20 FT Long Spool
24S - 24 FT Long Spool
(Other spool lengths available upon request)

8. Pipe Designator Spool End Prep Options
KE - Pipe Main Beveled to Knife Edge
BV - Pipe Main Beveled Ends w/ landing
SQ - Pipe Main Square Cut/Face Ends

9. Standardized Option
SS - Standardized Spool with Equally Spaced Valves

10. Options
E - End of line welded to end of spool
(Other options available on request)

Optional Loosely Shipped Components

BA-7 - Pipe Socket Valve

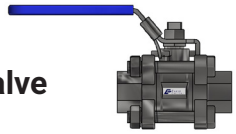

AV1 - Air Vent

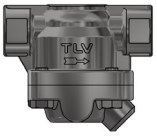

Pipe End Prep Options

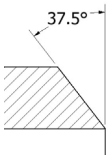

KE - Knife Edge

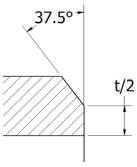

BV - Beveled w/ Landing

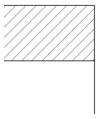

SQ - Square Cut

(Other options available on request)

Evans Components Inc.
7606 SW Bridgeport Road, Portland, OR 97224 USA
Phone 971.249.1600 | Fax 971.249.1601
www.evanscomponents.com

EVANS COMPONENTS

PCW End of Line Part Number Matrix

EXAMPLE: CPCW - 96 - 48 BF11 _ _ - SS - BA34-12C
1 - 2 - 3 4 5 6 - 7 - 8

Above part number describes a CPCW EOL assembly, 6" 304L main pipe, 3" butterfly valve w/ lever handle, pipe x pipe weld cap, 3/4" compression ball valve welded to pipe cap

1. System Type Designator
Example: CPCW, ALCPCW, PCW, etc...

2. Main Size Designator

24 - 1-1/2"	128 - 8"
32 - 2"	160 - 10"
40 - 2-1/2"	192 - 12"
48 - 3"	224 - 14"
64 - 4"	256 - 16"
96 - 6"	

3. EOL Valve Size

08 - 1/2"	48 - 3"
12 - 3/4"	64 - 4"
16 - 1"	96 - 6"
24 - 1-1/2"	128 - 8"
32 - 2"	160 - 10"
40 - 2-1/2"	

4. Valve Designator
BF11 - Butterfly Valve w/ Lever Handle (3" valve standard)
BF12 - Butterfly Valve w/ Gear Operator (6" valve standard)
STR - Straight 2-way Ball Valve

5/6. Inlet/Outlet Designator
G - 304L SCH 10 Pipe
L - 316L SCH 10 Pipe
E - Pipe Socket
PC - Pipe Weld Cap
U - 150# ANSI Flange
(If standard design shown below, leave 5 + 6 blank)

7. Standardized Option
SS - Standardized Design

8. Options
BA34-12C - 3/4" Valve w/ Compression Outlet Welded to Pipe Cap
Other options available on request

Standard EOL design

BF11

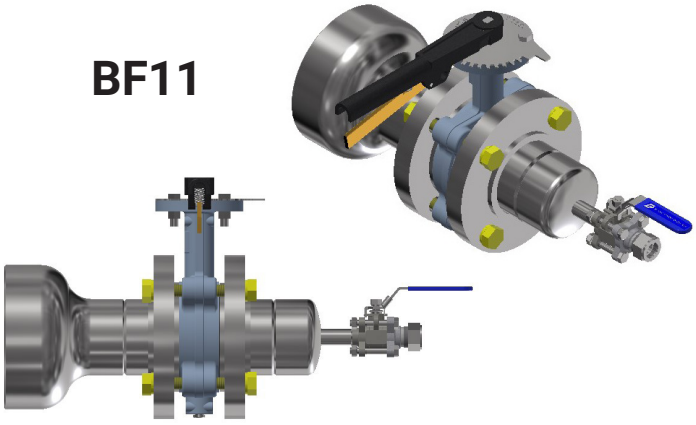

BF12

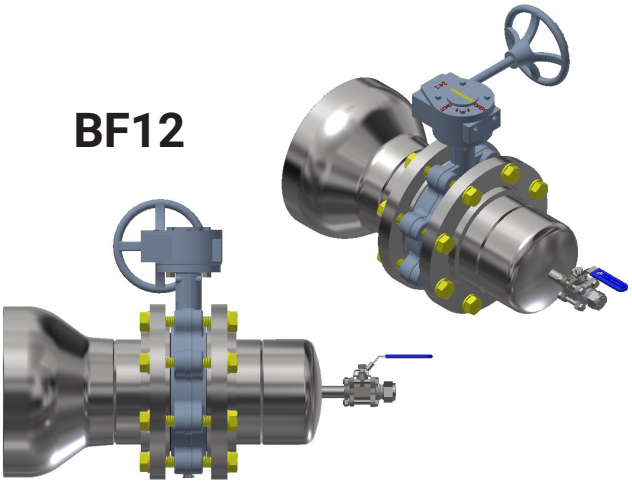

Evans Components Inc.
7606 SW Bridgeport Road, Portland, OR 97224 USA
Phone 971.249.1600 | Fax 971.249.1601
www.evanscomponents.com

CFOS (Cleaned for Oxygen Service) Manifolds

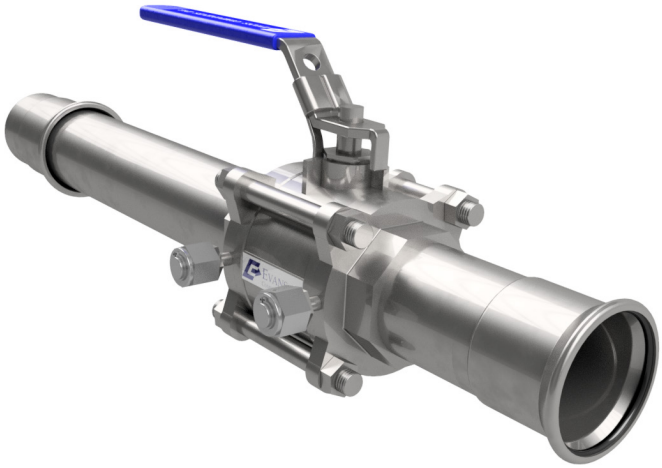

CFOS Applications

High quality/cost effective systems where cleaning for oxygen-grade quality and cleanroom packaging is essential. Oil-Free Air (OFA), Clean-Dry-Air (CDA), Utility Nitrogen (UN2), General Nitrogen (GN2), Low Purity Oxygen (LPO2), Leak Check Helium (LCHe), and other inert gas applications

Benefits & Features

- Built using Evans High Purity “full ported” BA Series valves
- “Weld free” manifold installs using Evans proprietary Presslok joining system (Lowest Installed Cost Option on the Market)
- Manifolds are 100% helium leak tested to 1 x 10-7 atm scc/sec
- Minimized “dead leg” volume between main tube and branch connection
- Complete QA/QC documentation package

Spool/Manifold Configurations

- Main run lengths up to 24ft (7m), and diameters up to MPS 12 (300mm)
- Manifold assemblies fully traceable and individually marked with customer specified markings and standard part number
- Branch valve (POC) sizes up to 6”
- Available with 304L or 316L stainless ASTM tube or pipe (KEE or KEX for LCHE)
- Custom EOL (end of line) assemblies
- Wide range of end connections, optional purge ports/valves

Specifications & Design Rules

- Maximum Valve Pressure Rating: 1000 psi (68 bar) @ 100° F (38° C)
- Temperature Rating: -20° F (-29° C) to 375 ° F (190° C)
- POC (point of connection) / valve alignment +/- 1°
- Minimum valve spacing between POC’s 8” (200mm)
- Minimum POC distance from end of tube is 8” (200mm)
- Dimensional tolerance +/- 0.25” (6.35mm)

Evans Components Inc.
7606 SW Bridgeport Road, Portland, OR 97224 USA
Phone 971.249.1600 | Fax 971.249.1601
www.evanscomponents.com

EVANS COMPONENTS

“Weld Free” CFOS Lateral Install (Presslok System)

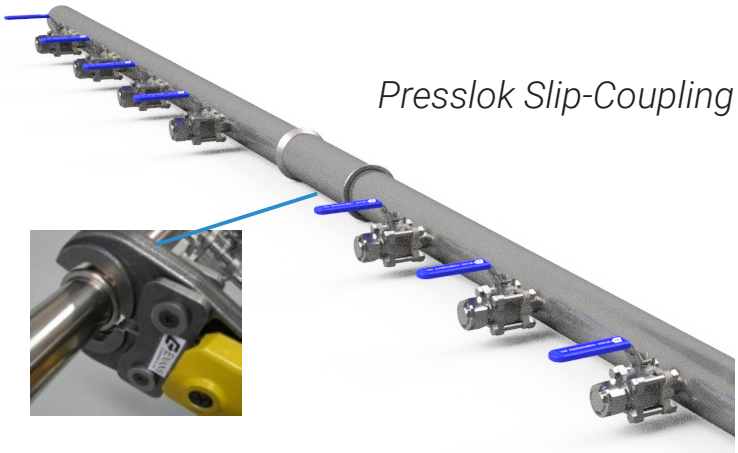

Steps required for Orbital Welding

- Dynamic Argon purge required (run purge lines, set-up Dewar, monitor purge pressures, wait for O2 levels to get to acceptable level, etc.)
- Weld coupon at start/end of shift
- Weld coupon required when parameters change: change in size, heat number, every 10-15 welds, etc.
- Each test weld coupon to be inspected and approved by QCR/QAR prior to installation
- Hot “work permit” required
- Tack welds needed for alignment 1-1/2” – larger
- Skilled field weld labor required for orbital welding

Installation required for Presslok

- Dynamic purge not required
- Weld coupon not required
- No inspection approval required by QCR/QAR
- No “hot work” permit
- No tacking, only mark OD of tube for insertion depth
- Scarce skilled weld labor not required, can be used for other parts of the project

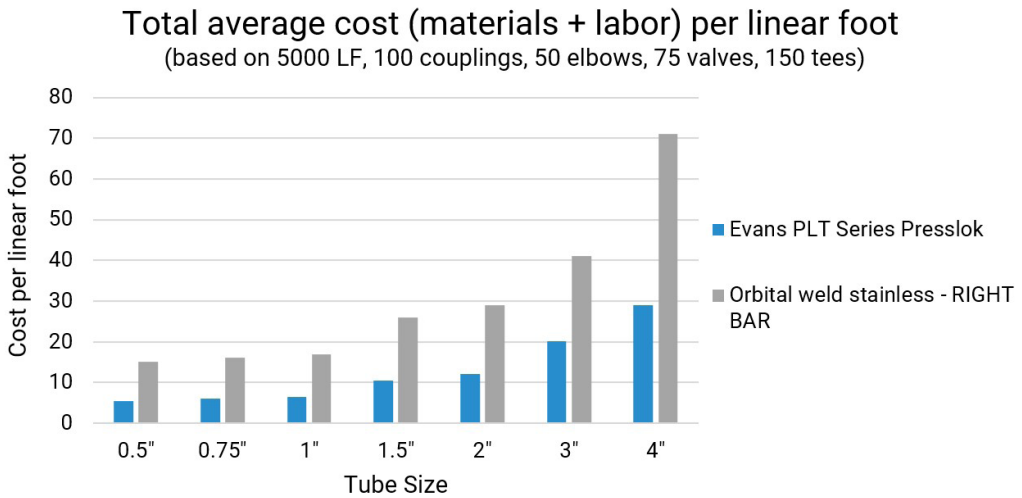

Evans Components Inc.
7606 SW Bridgeport Road, Portland, OR 97224 USA
Phone 971.249.1600 | Fax 971.249.1601
www.evanscomponents.com

CFOS Manifold Part Numbering Matrix

CFOS Complete Lateral Part Number Matrix

Upstream — Downstream

EXAMPLE: OFA - 08 - 24 SHC24 M D - XX - 12 - 144 - SC - SS
1 - 2 - 3 4 5 6 - 7 - 8 - 9 - 10 - 11

Above part number describes a OFA Lateral 1-1/2" 316L stainless steel tube main 144 ft. long with 12' long spools, 24 each 1/2" stainless ball valves, 1/2" capped compression valve outlet connection, no purge port, and a Presslok slip coupling connection, standard spools.

1. System Type Designator
Example: OFA, CDA, HPCDA, GN2, UN2, LCHe, LPO2, BA, etc...

2. Valve Size

24 - 1/4"	20 - 1-1/4"
06 - 3/8"	24 - 1-1/2"
08 - 1/2"	32 - 2"
10 - 5/8"	40 - 2-1/2"
12 - 3/4"	48 - 3"
16 - 1"	64 - 4"

3. Main Size Designator

04 - 1/4"	32 - 2"	160 - 10"
06 - 3/8"	40 - 2-1/2"	192 - 12"
08 - 1/2"	48 - 3"	224 - 14"
12 - 3/4"	64 - 4"	256 - 16"
16 - 1"	96 - 6"	
24 - 1-1/2"	128 - 8"	

4. Valve Assembly Pattern Designator
SHC* - Single Horizontal Cross
SHC90* - Single Horizontal Cross with 90-elbow
DHC* - Double Horizontal Cross
DHT* - Double Horizontal Tee
DVT* - Double Vertical Tee

Manifold Assemblies**
** - Insert number designator indicating total quantity of valves required for manifold. (Example: DHC6, Double Horizontal Cross pattern, 6 valves)

5. Main Tube Connection Designator
M - 316L SS Tube Main
W - 304L SS Tube Main

6. Valve Outlet Connection Designator
M - 316L SS Tube Extension
C - SS Compression Fitting
D - Plugged SS Compression Fitting
PL - Presslok Press Tube Fitting
PLTVP - Removeable Presslok Cap (1-1/2" & 2" size options)
W - 304L SS Tube Extension
U - 304L ANSI 150# Flange
UP - 304L ANSI 150# Flange w/ PVC Blind Flange
US - 304L ANSI 150# Flange w/ SS Blind Flange
T - 316L Tube Extension with Weld Cap
Y - Dockweiler Removable Weld Cap

7. Purge Port Designator (Upstream/Downstream)
(1/4" purge port: 1/4" - 2-1/2", 1/2" purge port: 3" and up)
X - No Purge Port
P - Capped Compression
Z - Capped Male Face Seal

8. Individual Spool Length
6 - 6 FT Long Spools
8 - 8 FT Long Spools
10 - 10 FT Long Spools
12 - 12 FT Long Spools
20 - 20 FT Long Spools
24 - 24 FT Long Spools
(Other spool lengths available upon request)

9. Length of Lateral in Feet
* - Insert number designator indicating total length of lateral in feet. (Example: OFA-08-24SHC6MD-XX-12-144-SC-SS, lateral assembly 144' long)

10. Optional Main Line End Connection
SC - Presslok Slip Coupling (one end of each spool)
PLT - Presslok Half Coupling (one end of each spool)

11. Standardized Option
SS - Standardized Spool with Equally Spaced Valves

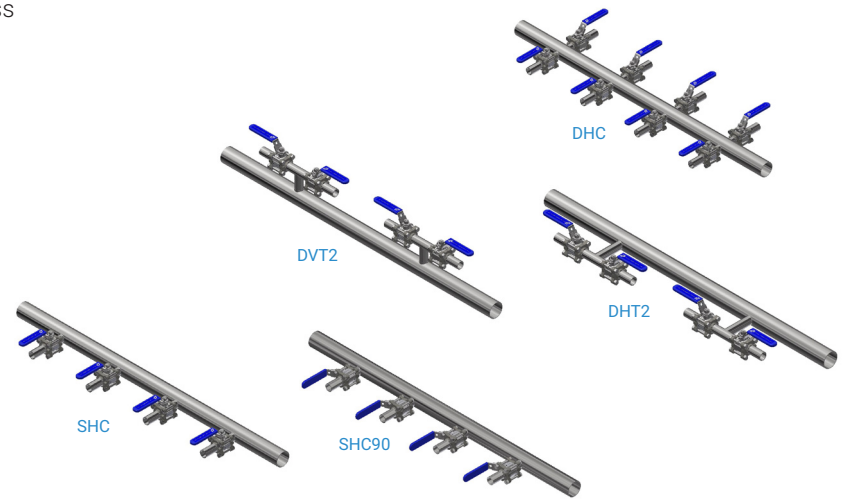

Evans Components Inc.
7606 SW Bridgeport Road, Portland, OR 97224 USA
Phone 971.249.1600 | Fax 971.249.1601
www.evanscomponents.com

EVANS COMPONENTS

CFOS Manifold Part Numbering Matrix

CFOS Individual Spool Part Number Matrix

Upstream — Downstream

EXAMPLE: OFA - 08 - 24 SHC2 M D - XX - 12S - SC - SS - __

1 - 2 - 3 4 5 6 - 7 - 8 - 9 - 10 - 11

Above part number describes a OFA Spool 1-1/2" 316L stainless steel tube main 12' long, 2 each 1/2" stainless ball valves, 1/2" capped compression valve outlet connection, no purge port, and a Presslok slip coupling connection, standard spool.

1. System Type Designator

Example: OFA, CDA, HPCDA, GN2, UN2, LCHe, LPO2, BA, etc...

2. Valve Size

04 - 1/4"	20 - 1-1/4"
06 - 3/8"	24 - 1-1/2"
08 - 1/2"	32 - 2"
10 - 5/8"	40 - 2-1/2"
12 - 3/4"	48 - 3"
16 - 1"	64 - 4"

3. Main Size Designator

04 - 1/4"	32 - 2"	160 - 10"
06 - 3/8"	40 - 2-1/2"	192 - 12"
08 - 1/2"	48 - 3"	224 - 14"
12 - 3/4"	64 - 4"	256 - 16"
16 - 1"	96 - 6"	
24 - 1-1/2"	128 - 8"	

4. Valve Assembly Pattern Designator

SHC* - Single Horizontal Cross
SHC90* - Single Horizontal Cross with 90-elbow
DHC* - Double Horizontal Cross
DHT* - Double Horizontal Tee
DVT* - Double Vertical Tee

Manifold Assemblies**

** - Insert number designator indicating total quantity of valves required for manifold. (Example: DHC6, Double Horizontal Cross pattern, 6 valves)

5. Main Tube Connection Designator

M - 316L SS Tube Main
W - 304L SS Tube Main

6. Valve Outlet Connection Designator

M - 316L SS Tube Extension
C - SS Compression Fitting
D - Plugged SS Compression Fitting
PL - Presslok Press Tube Fitting
PLTVP - Removeable Presslok Cap (1-1/2" & 2" size options)
W - 304L SS Tube Extension
U - 304L ANSI 150# Flange
UP - 304L ANSI 150# Flange w/ PVC Blind Flange
US - 304L ANSI 150# Flange w/ SS Blind Flange
T - 316L Tube Extension with Weld Cap
Y - Dockweiler Removable Weld Cap

7. Purge Port Designator (Upstream/Downstream) (1/4" purge port: 1/4" - 2-1/2", 1/2" purge port: 3" and up)

X - No Purge Port
P - Capped Compression
Z - Capped Male Face Seal

8. Individual Spool Length

6S - 6 FT Long Spool
8S - 8 FT Long Spool
10S - 10 FT Long Spool
12S - 12 FT Long Spool
20S - 20 FT Long Spool
24S - 24 FT Long Spool
(Other spool lengths available upon request)

9. Optional Main Line End Connection

SC - Presslok Slip Coupling (one end of each spool)
PLT - Presslok Half Coupling (one end of each spool)

10. Standardized Option

SS - Standardized Spool with Equally Spaced Valves

11. Options

E - End Of Line Connected to End of Spool
(Other options available upon request)

Evans Components Inc.
7606 SW Bridgeport Road, Portland, OR 97224 USA
Phone 971.249.1600 | Fax 971.249.1601
www.evanscomponents.com

EVANS COMPONENTS

CFOS Manifold Part Numbering Matrix

CFOS End of Line Part Number Matrix

Upstream Downstream

EXAMPLE: LPO2 - 32 - 32 STR PLTV - PP - SS - E - ___

1 - 2 - 3 4 5/6 - 7 - 8 - 9 - 10

Above part number describes a LPO2 end of line assembly, 2" main, 2" ball valve with presslok inlet, presslok cap outlet, upstream and downstream capped compression purges, standard length

1. System Type Designator

Example: OFA, CDA, HPCDA, GN2, UN2, LCHe, LPO2, BA, etc...

2. Main Size Designator

04 - 1/4"	32 - 2"	160 - 10"
06 - 3/8"	40 - 2-1/2"	192 - 12"
08 - 1/2"	48 - 3"	224 - 14"
12 - 3/4"	64 - 4"	256 - 16"
16 - 1"	96 - 6"	
24 - 1-1/2"	128 - 8"	

3. Valve Size

04 - 1/4"	12 - 3/4"	32 - 2"
06 - 3/8"	16 - 1"	40 - 2-1/2"
08 - 1/2"	20 - 1-1/4"	48 - 3"
10 - 5/8"	24 - 1-1/2"	64 - 4"

4. Valve Assembly Pattern Designator

STR - Straight 2-way valve

5/6. Valve Inlet/Outlet Connection Designator

PLTV - Standard Presslok inlet/Presslok cap outlet
M - 316L SS Tube Extension
C - SS Compression Fitting
D - Plugged SS Compression Fitting
PL - Presslok Press Tube Fitting
W - 304L SS Tube Extension
U - 304L ANSI 150# Flange
UP - 304L ANSI 150# Flange w/ PVC Blind Flange
US - 304L ANSI 150# Flange w/ SS Blind Flange
T - 316L Tube Extension with Weld Cap
Y - Dockweiler Removable Weld Cap

7. Purge Port Designator (Upstream/Downstream)
(1/4" purge port: 1/4" - 2-1/2", 1/2" purge port: 3" and up)

X - No Purge Port
P - Capped Compression
Z - Capped Male Face Seal

8. Standardized Option

SS - Standardized Design

9. Beginning/End of Line Designator

E - End of Line
B - Beginning of Line

10. Options

PI43 - Ø2.5" 0-100psi Pressure gauge w/ 1/4" BA-48 valve
Other options available upon request

Standard EOL design

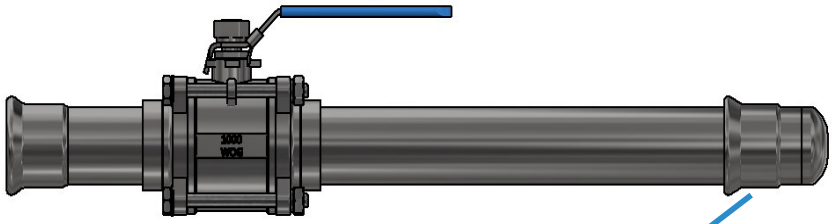

Optional Presslok Connection

Downstream Presslok Cap

Evans Components Inc.
7606 SW Bridgeport Road, Portland, OR 97224 USA
Phone 971.249.1600 | Fax 971.249.1601
www.evanscomponents.com

EVANS COMPONENTS

UHP (Ultra High Purity) Manifolds

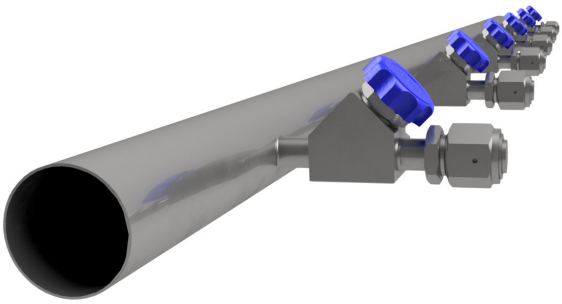

UHP Applications

UHP inert gases such as Nitrogen, Specialty High Pressure OFA, Argon, Helium, Oxygen, Specialty Gas and systems requiring the highest grade of materials and cleanliness

Benefits & Features

- Built using customer specified diaphragm & bellows valves
- Minimized “dead-leg” volume design using proprietary tube pulling and welding equipment
- Optional particle and moisture testing
- 30% - 40% Cost savings vs. conventional stick-built approach
- Manifolds are 100% helium leak tested to 1 x 10-9 atm scc/sec
- Nitrogen purged and double-bagged in ISO class 5 cleanroom
- Complete QA/QC documentation package

Spool/Manifold Configurations

- Main run lengths up to 24ft (7m), and diameters up to 6” (150mm)
- Branch valve (POC) sizes up to 2”
- 316L stainless electropolished Dockweiler Ultron tube (KET)
- Custom EOL (end of line) assemblies
- Wide range of end connections, optional purge ports/valves

Specifications & Design Rules

- Maximum Valve Pressure Rating: Refer to valve manufacturers specifications
- POC (point of connection) / valve alignment +/- 1°
- Minimum valve spacing between POC’s 8.50” (216mm)
- Minimum POC distance from end of tube is 8.50” (216mm)
- Dimensional tolerance +/- 0.25” (6.35mm)

Evans Components Inc.
7606 SW Bridgeport Road, Portland, OR 97224 USA
Phone 971.249.1600 | Fax 971.249.1601
www.evanscomponents.com

EVANS COMPONENTS

UHP Complete Lateral Part Number Matrix

EXAMPLE: HPN2 - 16 - 48 - S 100 - 36 - MC P1 - 12 - 144 - SS - __
1 - 2 - 3 - 4 5 - 6 - 7 8 - 9 - 10 - 11 - 12

Above part number describes a UHP Lateral 3" Ultron 316L EP tube main 144 ft. long lateral with 12' long spools, 36 1" S100 straight pattern diaphragm valves, 1" male face seal with cap valve outlet connection, Downstream purge port, yellow handles, standard spools

1. System Type Designator

Example: HPN2, SOFA, HPAR, HPO2, LCO2, HPHE, etc...

2. Valve Size

04 - 1/4"
08 - 1/2"
12 - 3/4"
16 - 1"
24 - 1-1/2"
32 - 2"

3. Main Size Designator

08 - 1/2"	40 - 2-1/2"
12 - 3/4"	48 - 3"
16 - 1"	64 - 4"
24 - 1-1/2"	96 - 6"
32 - 2"	

4. Valve Orientation

S - Straight Pattern (SPDS)
AS - Angle Pattern (ASPDS)

5. Diaphragm Valve Type

250 - 1/4" (Cv 0.41)
375 - 1/4" high flow (Cv 0.64)
500 - 1/2" (Cv 2.81)
755 - 3/4" (Cv 3.15)
100 - 1" (Cv 9.00)

6. Number of POC Connections

Total Number of Valves
Example: 36 = 36 POC Connections

7. Valve Outlet Connection Designator

FV - Female Face Seal
MV - Male Face Seal
FP - Female Face Seal with Plug
MC - Male Face Seal with Cap
TS - Tube Stub
TC - Tube Stub with Compression Cap/NY ferrules
DC - Tube Stub with Dockweiler Removeable Weld Cap
WC - Tube Stub with Standard Weld Cap

8. Purge Port Option

XX - No Purge Port
P1 - Downstream Purge Port
P2 - Upstream/Downstream Purge Port

9. Individual Spool Length

6 - 6 FT Long Spools
8 - 8 FT Long Spools
10 - 10 FT Long Spools
12 - 12 FT Long Spools
20 - 20 FT Long Spools
24 - 24 FT Long Spools
(Other spool lengths available upon request)

10. Length of Lateral in Feet

* - Insert number designator indicating total length of lateral in feet. (Example: UL-8-12-SP375-20-MV-XX-8-64-Y lateral assembly 64' long)

11. Standardized Option

SS - Standardized Spool with Equally Spaced Valves

12. Options

LO - Clear Lock-Out Tag-out clamshell
Other options available on request

Evans Components Inc.
7606 SW Bridgeport Road, Portland, OR 97224 USA
Phone 971.249.1600 | Fax 971.249.1601
www.evanscomponents.com

UHP Individual Spool Part Number Matrix

EXAMPLE: HPN2 - 16 - 48 - S 100 - 2 - MC P1 - 12S - SS - ___
1 - 2 - 3 - 4 5 - 6 - 7 8 - 9 - 10 - 11

Above part number describes a UHP Lateral 3" Ultron 316L EP tube main 12' long spool, 2 1" S100 straight pattern diaphragm valves, 1" male face seal with cap valve outlet connection, Downstream purge port, yellow handles, standard spools

1. System Type Designator

Example: HPN2, SOFA, HPAR, HPO2, LCO2, HPHE, etc...

2. Valve Size

04 - 1/4"
08 - 1/2"
12 - 3/4"
16 - 1"
24 - 1-1/2"
32 - 2"

3. Main Size Designator

08 - 1/2"
12 - 3/4"
16 - 1"
24 - 1-1/2"
32 - 2"
40 - 2-1/2"
48 - 3"
64 - 4"
96 - 6"

4. Valve Orientation

S - Straight Pattern (SPDS)
AS - Angle Pattern (ASPDS)

5. Diaphragm Valve Type

250 - 1/4" (Cv 0.41)
375 - 1/4" high flow (Cv 0.64)
500 - 1/2" (Cv 2.81)
755 - 3/4" (Cv 3.15)
100 - 1" (Cv 9.00)

6. Number of POC Connections

Total Number of Valves
Example: 2 = 2 POC Connections

7. Valve Outlet Connection Designator

FV - Female Face Seal
MV - Male Face Seal
FP - Female Face Seal with Plug
MC - Male Face Seal with Cap
TS - Tube Stub
TC - Tube Stub with Compression Cap/NY ferrules
DC - Tube Stub with Dockweiler Removeable Weld Cap
WC - Tube Stub with Standard Weld Cap

8. Purge Port Option

XX - No Purge Port
P1 - Downstream Purge Port
P2 - Upstream/Downstream Purge Port

9. Individual Spool Length

6S - 6 FT Long Spool
8S - 8 FT Long Spool
10S - 10 FT Long Spool
12S - 12 FT Long Spool
20S - 20 FT Long Spool
24S - 24 FT Long Spool
(Other spool lengths available upon request)

10. Standardized Option

SS - Standardized Spool with Equally Spaced Valves

11. Options

LO - Clear Lock-Out Tag-out clamshell
E - End of Line Welded to End of Spool
Other options available on request

Evans Components Inc.
7606 SW Bridgeport Road, Portland, OR 97224 USA
Phone 971.249.1600 | Fax 971.249.1601
www.evanscomponents.com

UHP End of Line Part Number Matrix

EXAMPLE: SOFA - 64 - 64 HF - RF - CV - WC - PV - SS - E - ___
1 - 2 - 3 4 - 5 - 6 - 7 - 8 - 9 - 10 - 11

Above part number describes a 4" UHP HF series end of line valve w/ RFO gasket shipped loose, check valve shipped loose, weld cap end, purge valve, standard length.

1. System Type Designator
Example: HPN2, SOFA, HPAR, HPO2, LCO2, HPHE, etc...

2. Main Size Designator

08 - 1/2"	40 - 2-1/2"
12 - 3/4"	48 - 3"
16 - 1"	64 - 4"
24 - 1-1/2"	96 - 6"
32 - 2"	

3. Valve Size

08 - 1/2"	40 - 2-1/2"
12 - 3/4"	48 - 3"
16 - 1"	64 - 4"
24 - 1-1/2"	96 - 6"
32 - 2"	

4. Valve Designator
HF - HF Series Valve
HFC - HFC Series Valve (Cast)

5. Gasket
RF - 1/2"Reduced Flow Orifice Gasket (100284-32) Shipped Loose

6. Check Valve
CV - 1/2" Check Valve (102857-01) Shipped Loose

7. Weld Cap
WC - Weld Cap on outlet

8. Purge Valve
PV - 1/2" MVCR Outlet Purge Valve

9. Standardized Option
SS - Standardized Design

10. End of Line
E - End of Line

11. Options
Different design options available on request

Standard EOL design

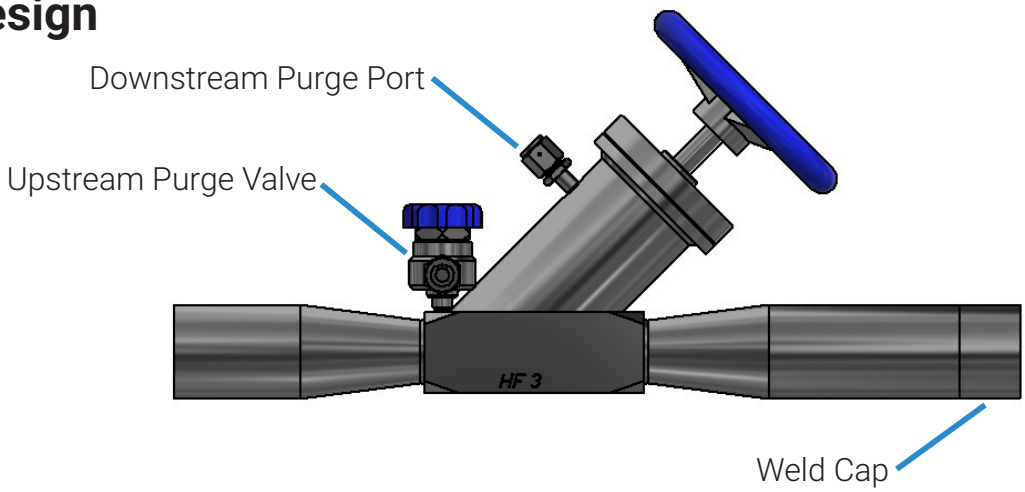

Evans Components Inc.
7606 SW Bridgeport Road, Portland, OR 97224 USA
Phone 971.249.1600 | Fax 971.249.1601
www.evanscomponents.com

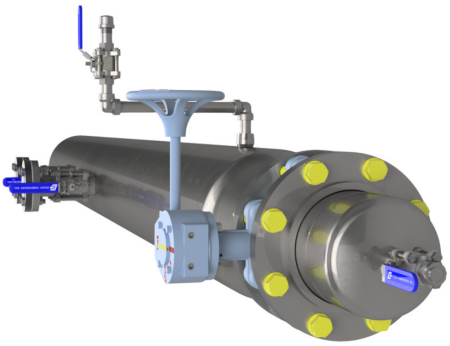

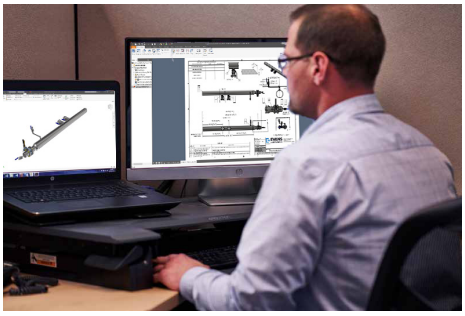

End-of-line Manifold Assemblies

CFOS/PCW or UHP End-of-line manifolds can be supplied with a variety of configurations. Typical (EOL) assemblies for CFOS/UHP include “full size end of line ball or bellows valve with weld cap. PCW (EOL) manifolds are typically supplied with butterfly valve, vent/drain lines, reduced EOL isolation valve.

Innovative Manufacturing/Support

Evans manifolds are built using custom techniques, equipment and fixtures that have been developed and refined over the last 20+ years. Continuous process improvements and innovation have enabled us to produce a consistent high-quality product with efficiency, accuracy, and repeatable quality. Our production personnel are highly trained craftsmen, ASME Section 9 certified tig/orbital welders. All manifold orders are managed by a dedicated Project Manager whom coordinates all aspects of the process which includes inside sales, design, QA, production and shipping, thus streamlining work-flow and lead-times.

Engineering Support/Streamlined Solutions

- Dedicated engineering staff to help streamline design and provide quick-turn drawing packages to meet your needs. 3D drawings can be provided in the following formats: .step, DWG, Revit, and more
- Complete QA/QC and design documentation package provided in both hard copy and electronic format. All individual manifolds shipped with drawings, bay location, serial number, part number & heat certs.
- Custom packaging/crating and labeling for immediate on-site lateral identification, and damage free shipping

Evans Components Inc.
7606 SW Bridgeport Road, Portland, OR 97224 USA
Phone 971.249.1600 | Fax 971.249.1601
www.evanscomponents.com

EVANS COMPONENTS

Quality Manufacturing “Inside & Out”

Advanced Manufacturing

- Advanced computer-controlled machining, collaring & welding equipment ensures consistent repeatable processes
- Custom built work stations and fixturing provides precision assembly and accurate component alignment
- State-of-the-art innovative welding, purging and weld gas monitoring equipment insures a clean, consistent, repeatable and reproduceable high-quality welds
- Weld quality is inspected for concavity, convexity, discoloration, bead width/meander and axial/angular alignment
- QA Documentation package includes drawings, weld logs/maps, inspection certificate, certificate of compliance, and heat certs

High Quality Welded Manifolds

- The receipt for quality-built manifolds includes high-grade tubing/valves, joined with high-quality welded connections. Our welds are constructed using internally certified weld programs that have been developed, documented and supported by Procedure Qualification Records in accordance with ASME Boiler and Pressure Vessel Code Section IX requirements.
- Welds are logged with ID sign-off and used for traceability of the weld operator, date, and heat number. All welds are inspected, 100% helium leak tested and signed off by QC.
- Library of weld sample standards is maintained for acceptable/rejectable decolorization, concavity, convexity, surface imperfections, etc.
- All welds are in situ monitored for oxygen and I.D. pressure right at the weld zone using proprietary equipment, thus eliminating potential for I.D. color and improving overall quality

Evans Components Inc.
7606 SW Bridgeport Road, Portland, OR 97224 USA
Phone 971.249.1600 | Fax 971.249.1601
www.evanscomponents.com

Learn more about related Evans Products

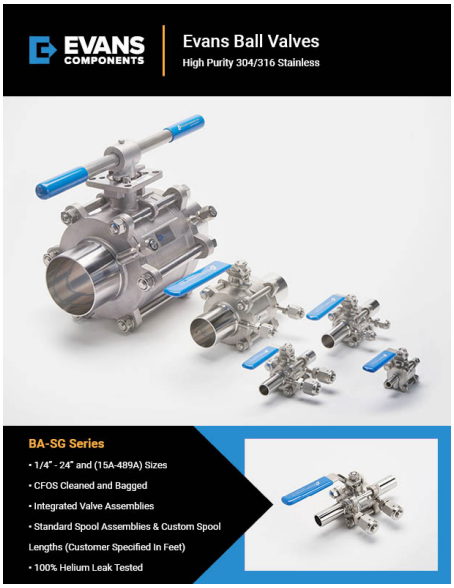

EVANS COMPONENTS

www.evanscomponents.com

7606 SW Bridgeport Road
Portland, Oregon 97224
Office 971.249.1600
Fax 971.249.1601

NOTE: Product availability and specifications contained herein are subject to change without notice.
Consult local distributor or factory for potential revisions.