EVANS COMPONENTS

Evans SS-G & GXL Series

Integrated Stainless Gas Sticks

Features

- 316SS CF8M Body Construction
- CFOS Cleaned and packaged in cleanroom
- 2-PC Design G-series allows for isolation and removal of regulator

Specifications

Series	CV	Working Pressure	Operating Temperature	Outlet Pressure Range
		psig (Bar)	°F (°C)	psig (Bar)
GS	0.14	500 34.5	-10 to 300 -40 to 149	0-150 0-10.3
GM	1.10	500 34.5	-10 to 300 -40 to 149	0-150 0-10.3
GL	1.80	500 34.5	-10 to 300 -40 to 149	0-150 0-10.3

Features

- High purity oxygen cleaned and packaged in a class 1000 cleanroom
- Compact design, ideal for applications where space is limited
- 316L CF8M Stainless construction
- Reduced number of mechanical connections and potential leak points
- Stainless end connections,1/4" thru 1" (6.4 mm-25.4 mm)
- Full port ball valve design, GS (0.187), GM/GL (0.406)
- Regulator: single stage, stainless diaphragm, kel F seat
- Gauge: -30 inHg - 0 - 200 psig (-1 - 0 - 14 bar), 2" dial, stainless
- 100% Helium leak tested to 1 X 10-7 scc/sec
- 2-PC Design allows for isolation and removal of regulator
- 74 micron stainless Pre-filter, eliminates potential for particulate damage to regulator seat

316L 74 Micron Thermobond Pre-Filter

Evans Components Inc.
7606 SW Bridgeport Road, Portland, OR 97224 USA
Phone 971.249.1600 | Fax 971.249.1601
www.evanscomponents.com

G-Stick Materials

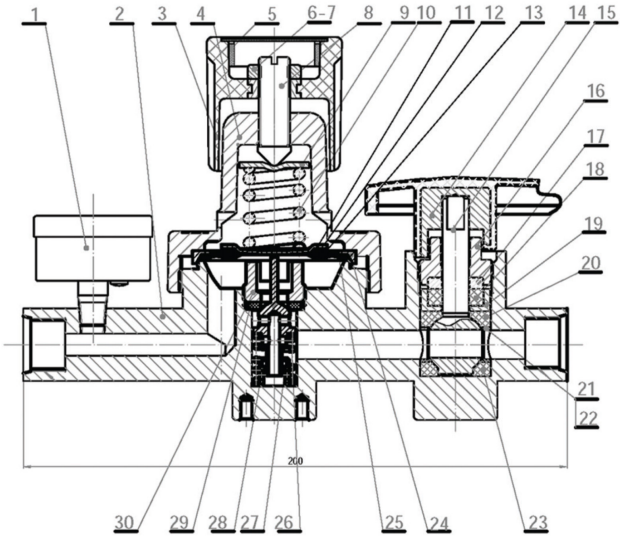

Materials of Construction		
Part Number	Component	Material
1	Gauge	SUS316
2	Body	CF8M 316SS
3	Adjusting Knob	ABS
4	Housing Cap	SUS316L
5	Cap	ABS
6	Nut	C3602BD
7	Spring	SWRH62B
8	Adjusting Screw	C3602BD
9	Spring Button	SS41
10	Spring	SWRH62B
11	Diaphragm Plate	SS41
12	O Ring	PTFE
13	O Ring	PTFE
14	Handle	ABS With Brass Insert
15	Ball Stem	SUS316
16	Packing Bolt	SUS316
17	Upper Gland	SUS316
18	Bushing	PTFE
19	Lower Gland	SUS316
20	Upper Packing	PTFE
21	Side Rings	SUS316
22	Slide Discs	SUS316
23	Lower Packing	PTFE
24	Washer	SUS316L
25	Diaphragm	SUS316L
26	Spring	SUS316
27	Seat	SUS316
28	Stem	SUS316
29	Gasket	PCTFE
30	Nozzle	SUS316

GS SERIES DIMENSIONS

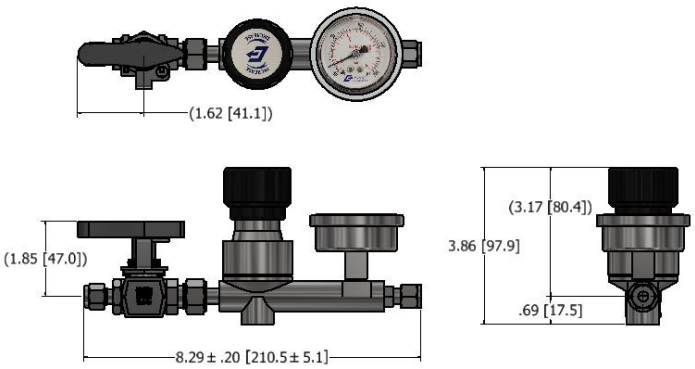

GM/GL SERIES DIMENSIONS

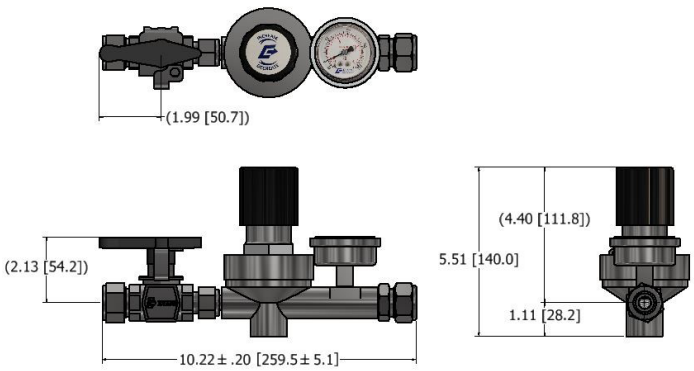

Evans Components Inc.
7606 SW Bridgeport Road, Portland, OR 97224 USA
Phone 971.249.1600 | Fax 971.249.1601
www.evanscomponents.com

EVANS COMPONENTS

Part Number Matrix

SS - 1 - 2 C - 3 - 4

EXAMPLE: SS-GM-8C-200-LO
G-Stick with 1/2" compression ends, 0-200 gauge, lock out handle

SS - 316 Stainless Steel

1. G-Stick Size

GS	Small	(0.14cv)
GM	Medium	(1.1cv)
GL	Large	(1.8cv)

2. Tube Size

4	1/4"
6mm	6mm
8mm	8mm
6	3/8"
10mm	10m
8	1/2"
12mm	12mm
12	3/4"
18mm	18mm
16	1"
25mm	25mm

C - Compression end connection (stainless)

3. Gauge

200	-30 inHg-0-200 psig (-1-0-14 bar)
PT1	0-150psig (0-10.3 bar) Stainless pressure transducer, 4-20 mA

4. options

LO	Locking Ball Valve Handle	
XX	No Option	
4L	L Filter	1/4" (6.4 mm) - 300 SLPM
6L	L Filter	3/8" (9.6 mm) - 300 SLPM
8L	L Filter	1/2" (12.7 mm) - 300 SLPM
6H	H Filter	3/8" (9.6 mm) 75 SCFM - 2100 SLPM
8H	H Filter	1/2" (12.7 mm) 75 SCFM - 2100 SLPM
90	Gauge rotated 90° (see page 5)	

Evans "Z-Clip" Unistrut Mounting

Z-Clip Part Number	Description
SS-MB-GS	GS Series G-Stick Mounting Bracket
SS-MB-GM/GL	GM/GL Series G-Stick Mounting Bracket

Optional G-stick Mounting on Slotted Unistrut

Insert –U at end of standard G-stick part number for mounting on anodized Unistrut

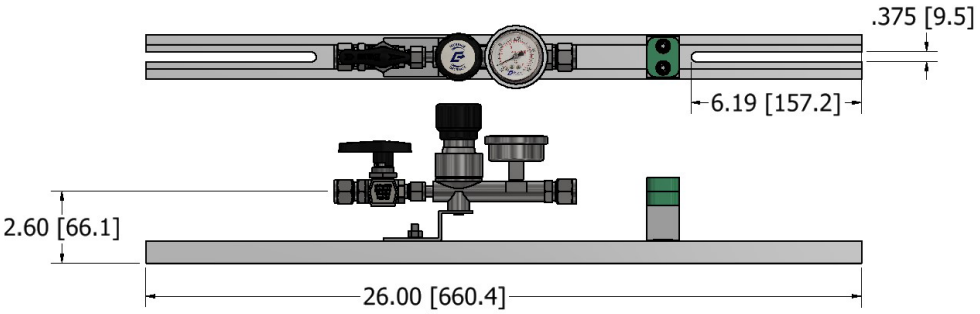

Evans Components Inc.
7606 SW Bridgeport Road, Portland, OR 97224 USA
Phone 971.249.1600 | Fax 971.249.1601
www.evanscomponents.com

EVANS COMPONENTS

0.003 Micron PTFE Membrane Filter Specifications

- 99.9999999% efficient @ 0.003 microns
- L option 0.5 sq.ft.(464.5 sq.cm) - effective filtration area
- H option 2.0 sq. ft.(1858 sq.cm) - effective filtration area
- 316L 10Ra electro-polished housing
- L option rated to a maximum of 300 SLPM
- H option rated to a maximum of 75 SCFM (2100 SLPM)

SS-L FILTER

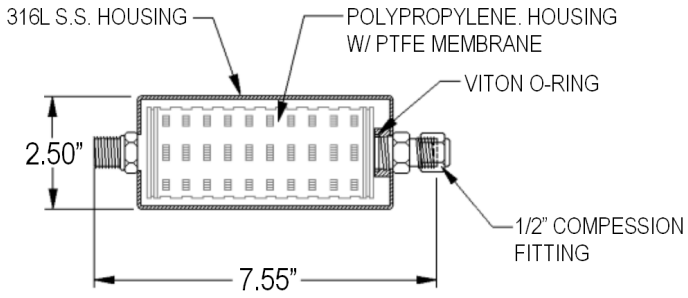

SS-H FILTER

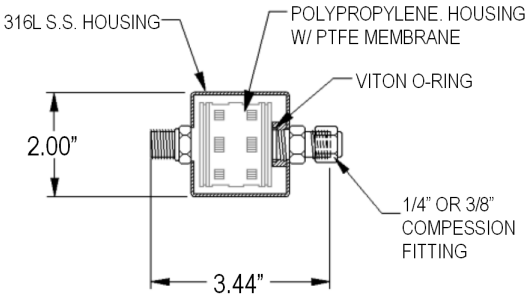

Standard Gauge Orientation

-90 Gauge Orientation

Evans Components Inc.
7606 SW Bridgeport Road, Portland, OR 97224 USA
Phone 971.249.1600 | Fax 971.249.1601
www.evanscomponents.com

EVANS COMPONENTS

GS Flow Curves

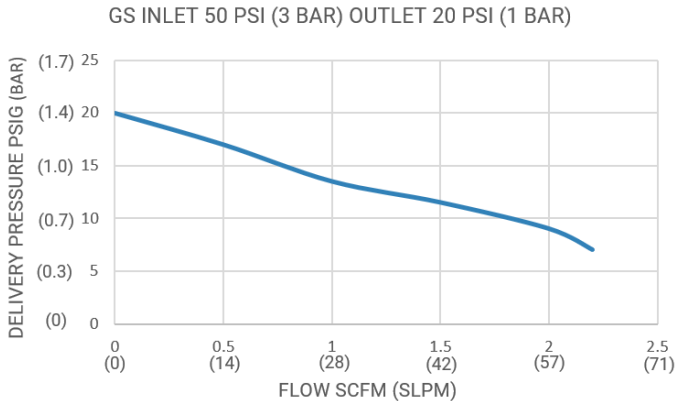

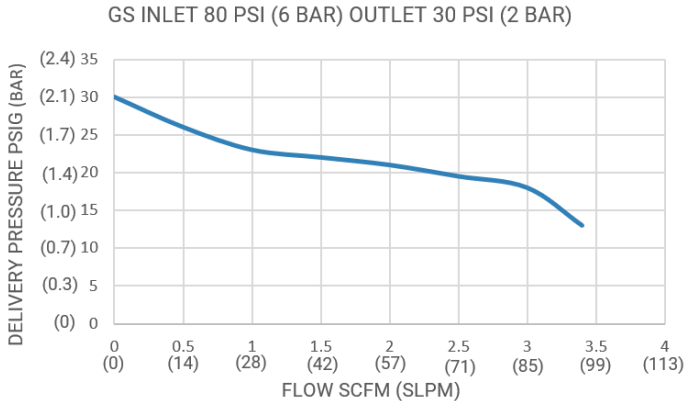

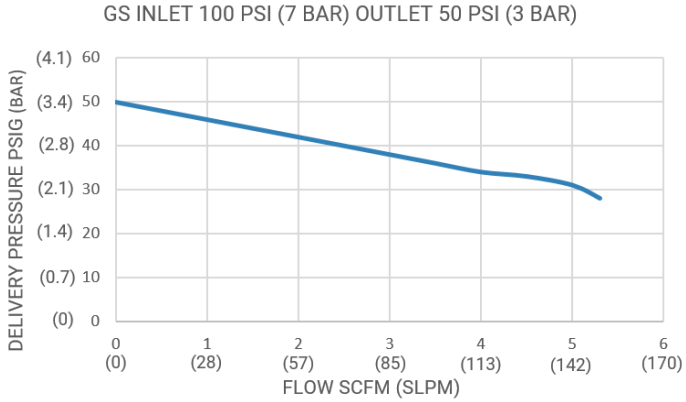

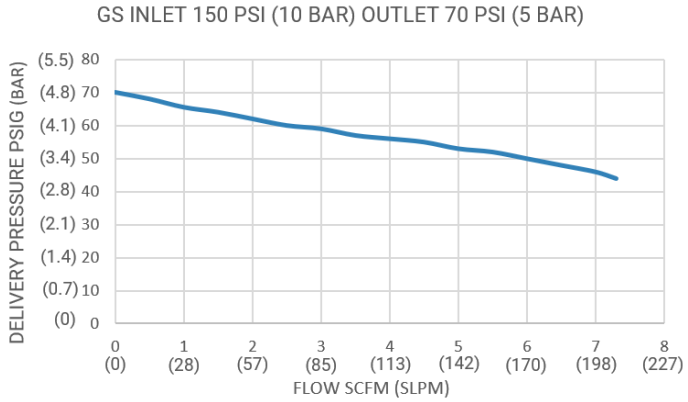

Evans Components Inc.
7606 SW Bridgeport Road, Portland, OR 97224 USA
Phone 971.249.1600 | Fax 971.249.1601
www.evanscomponents.com

GM Flow Curves

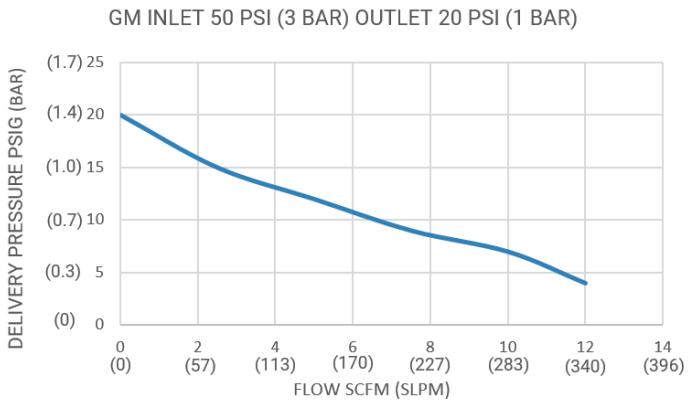

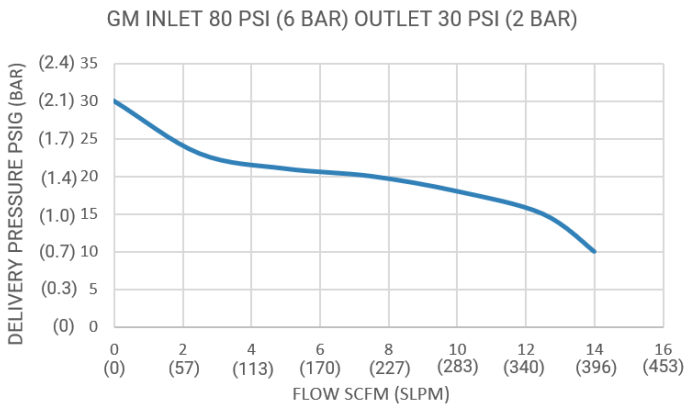

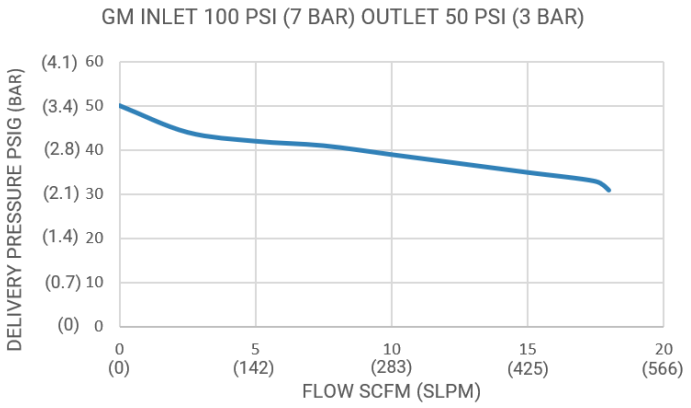

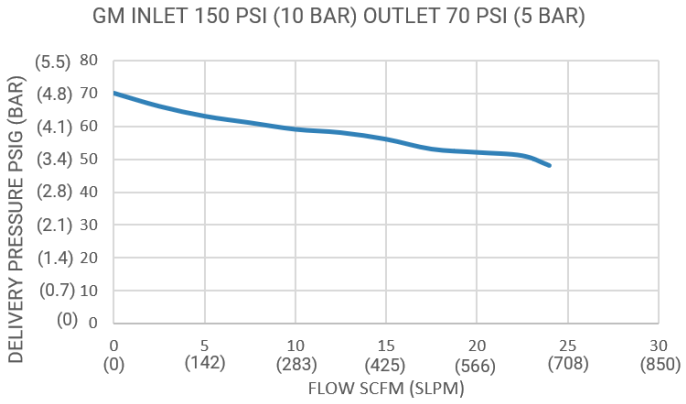

Evans Components Inc.
7606 SW Bridgeport Road, Portland, OR 97224 USA
Phone 971.249.1600 | Fax 971.249.1601
www.evanscomponents.com

GL Flow Curves

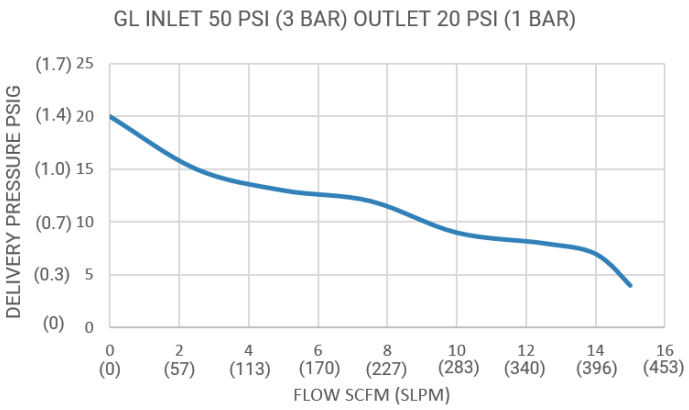

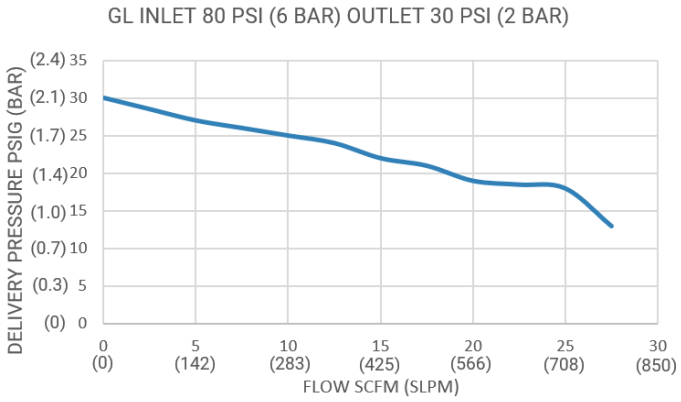

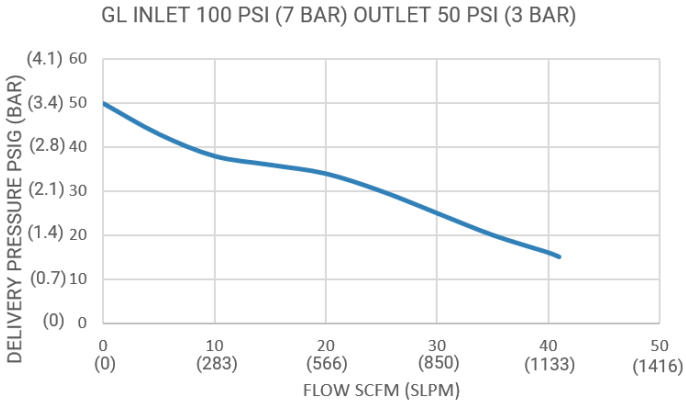

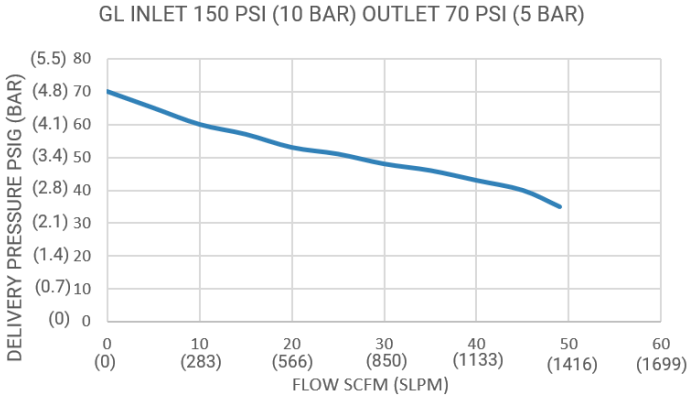

Evans Components Inc.
7606 SW Bridgeport Road, Portland, OR 97224 USA
Phone 971.249.1600 | Fax 971.249.1601
www.evanscomponents.com

EVANS COMPONENTS

Specifications

Series	CV	Working Pressure	Operating Temperature	Outlet Pressure Range
		psig (Bar)	°F (°C)	psig (Bar)
GXL	5.2	500 34.5	-10 to 150 -40 to 79	0-150 0-10.3

Features

- High purity oxygen cleaned and packaged in a class 1000 cleanroom
- Compact design, ideal for applications where space is limited
- Reduced number of mechanical connections and potential leak points
- Sizes ranging from 3/4” (19.1 mm) - 1-1/2” (38.1 mm)
- Full port ball valve design
- Regulator: single stage, Buna-N/Nylon reinforced diaphragm, Buna-N seat
- Gauge: 0-160 psig (0 - 11 bar), 2” (50.8 mm) dial, stainless
- 100% Helium leak tested to 1 X 10-7 scc/sec
- Stainless steel body construction

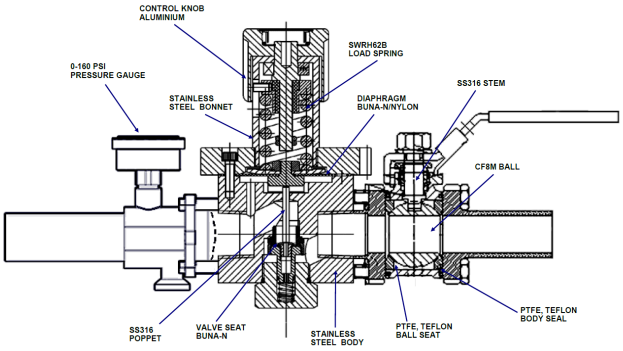

Evans Components Inc.
7606 SW Bridgeport Road, Portland, OR 97224 USA
Phone 971.249.1600 | Fax 971.249.1601
www.evanscomponents.com

Dimensions

3/4” Compression Dimensions

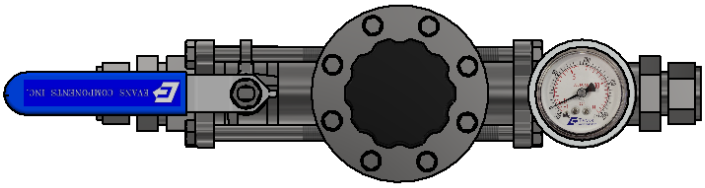

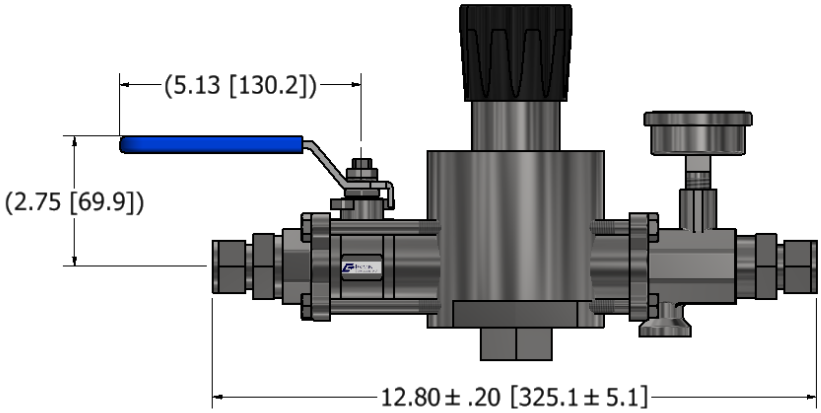

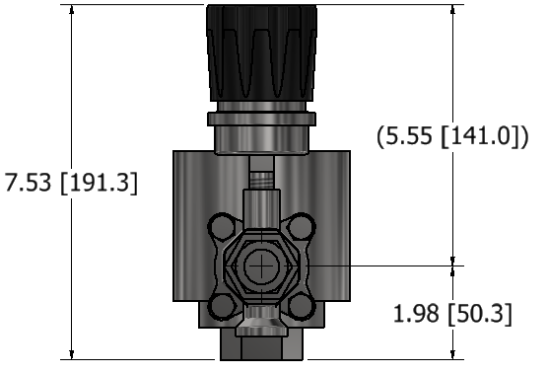

1” Compression Dimensions

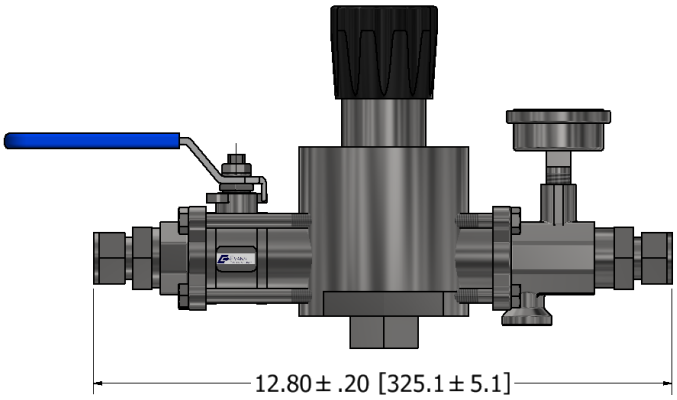

1” Tube Extension Dimensions

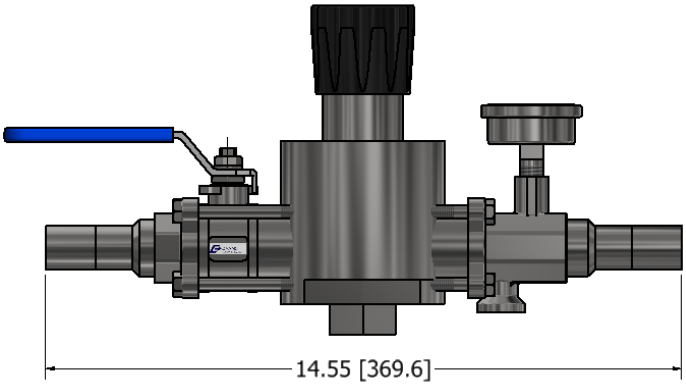

Evans Components Inc.
7606 SW Bridgeport Road, Portland, OR 97224 USA
Phone 971.249.1600 | Fax 971.249.1601
www.evanscomponents.com

Part Number Matrix

SS - GXL - 1 2 - 3- 4

EXAMPLE: SS-GXL-16C-200
Extra Large G-Stick with 1" compression ends, 0-200 gauge

SS - 316 Stainless Steel

GXL - XL G-stick (5.2cv)

1. Connection Size

08	1/2"	(12.7mm)
12	3/4"	(19.1mm)
16	1"	(25.4mm)
24	1.5"	(38.1mm)

2. connection type

C	Compression (Stainless)
M	Stainless tube stub
PLT	Presslok
U	ANSI 150# Flange
PM	Male NPT

3. Gauge Range

160	0-160 psig (0-11.0 bar)
200	-30 inHg-0-200 psig (-1-0-14 bar)

4. Options

90	Gauge rotated 90° (see page 5)

GXL Flow Curves

GXL INLET 300 PSI (21 BAR) OUTLET 150 PSI (10 BAR)

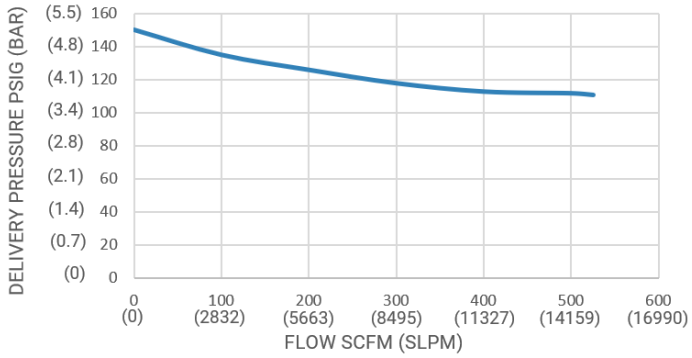

GXL INLET 300 PSI (21 BAR) OUTLET 70 PSI (5 BAR)

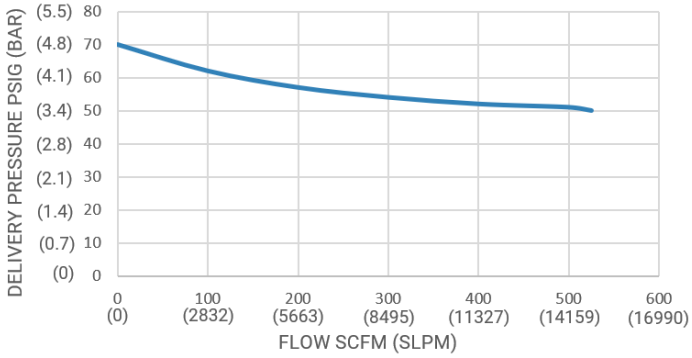

GXL INLET 200 (14 BAR) PSI OUTLET 150 PSI (10 BAR)

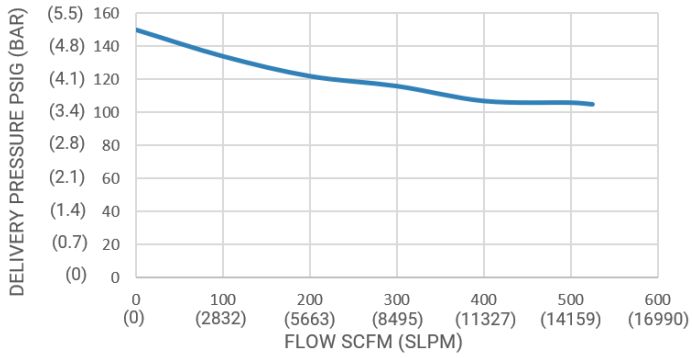

GXL INLET 150 PSI (10 BAR) OUTLET 70 PSI (5 BAR)

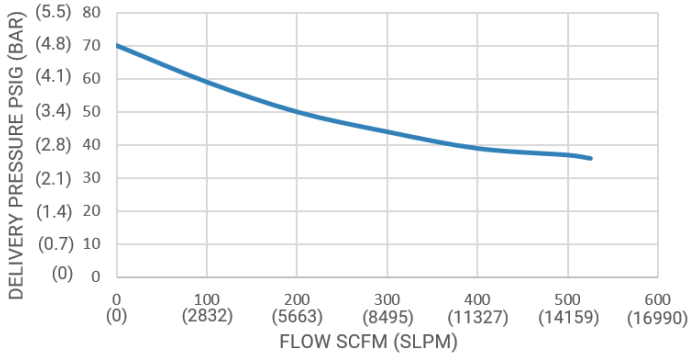

Evans Components Inc.
7606 SW Bridgeport Road, Portland, OR 97224 USA
Phone 971.249.1600 | Fax 971.249.1601
www.evanscomponents.com

EVANS COMPONENTS

Learn more about related Evans Products

EVANS COMPONENTS

www.evanscomponents.com

7606 SW Bridgeport Road
Portland, Oregon 97224
Office 971.249.1600
Fax 971.249.1601

NOTE: Product availability and specifications contained herein are subject to change without notice.
Consult local distributor or factory for potential revisions.

10/8/2020