EVANS COMPONENTS

Evans Ball Valves

PW “Industrial” Series

PW Series

- Full Port Design
- 1/4” - 6” Size Range
- Integrated Valve Assemblies
- Spool Manifolds up to 24’ (7m) Lengths
- One-piece ANSI 150lb Flange Optional
- 100% Leak Tested

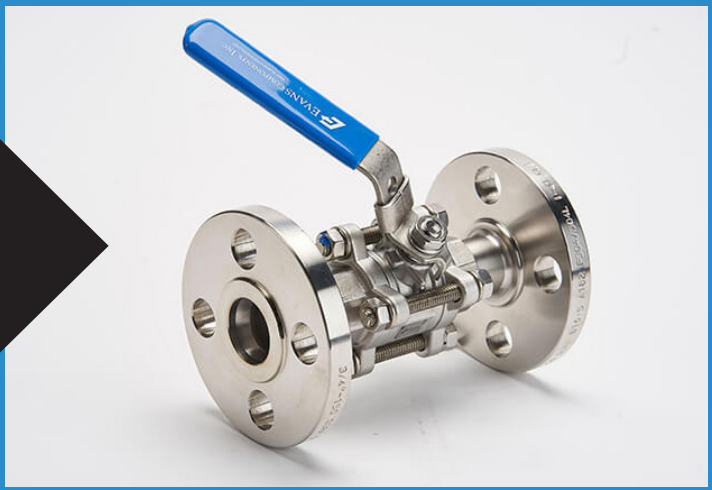

EVANS PW SERIES

In today's climate, manufacturers require three things from their valve suppliers

- Quality
- Lowest overall installed cost-of-ownership
- Reasonable delivery schedules for fast track projects

Evans Components Inc. provides all three. Evans Ball Valves perform to the highest levels of leak integrity available in the market today. Our valves and valve assemblies are 100% leak tested across the seat, and at all mechanical connections, to ensure reliability.

We maintain an extensive ball valve sub-assembly inventory to ensure fast response to routine or custom orders. The flexibility of our designs allow us to further minimize lead times. Our overall installed costs for ball valve assemblies are the lowest in the industry. This is achieved through innovation, and the manufacture of all ball valve assemblies in a controlled, production environment.

Features

Lower Installation Costs

- Reduction of over 60% of the welds normally required with conventional fabrication
- Elimination of additional fittings (weld-o-lets, flanges, ect.)
- Fully assembled/tested manifold assemblies that conform to ANSI B31.1 & ANSI B31.3
- No valve disassembly required for welding

Quality Production

- Stringent work procedures developed for all aspects of manufacturing
- Assemblies 100% leak tested at a factory level

Full Selection of Ball Valves

- Sizes from 1/4" to 6"
- Integrated ball valve assemblies available with 304L/316L stainless pipe or tube

Locking Handles Standard

- Lock-out, tag-out requirements

Full Port Design

- Improves flow characteristics
- No pressure drop

Specifications

- Maximum Pressure Rating : 1000 psig @ 100°F (69 bar @ 38°C)
- Pressure Rating 150 lb flange connections : 275 psig
- Temperature Rating: -20°F to 375°F at 100 psig
- Helium Leak Tested: 1 x 10-7 scc/sec

Spool/Manifold Assemblies

- All Spool/Manifold assemblies individually marked with standard catalog part number using part number matrix
- Manifold Assemblies 100% leak tested
- 304L pipe is solution annealed and meets ASTM A312-15 & ASME SA312-13. Pipe is pickled & passivated per ASTM A380-06
- Spool/Manifold assemblies available up to 24' (7m) in length
- POC alignment specification is +/- 1-degree

Valve Size	CV
1/4"	9.5
3/8"	11.8
1/2"	26
3/4"	50
1"	94
1.5"	260
2"	480
2.5"	831
3"	1320
4"	2550
6"	4550

Evans Components Inc.
7606 SW Bridgeport Road, Portland, OR 97224 USA
Phone 971.249.1600 | Fax 971.249.1601
www.evanscomponents.com

EVANS COMPONENTS

24’ (7m) Manifold Assemblies

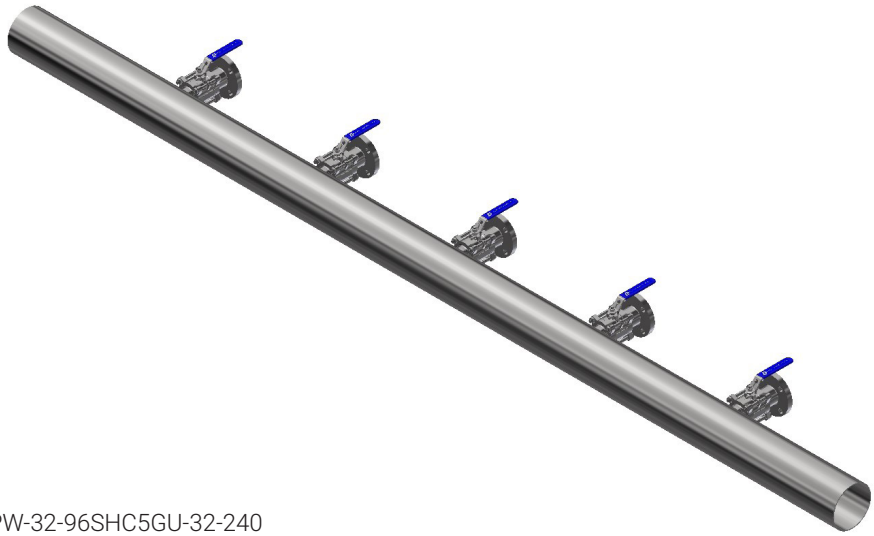

Example Part Number: PW-32-96SHC5GU-32-240

6” 304L Sch. 10 pipe, 20 ft. long with 5 each 2” Evans Valves, 150 lb. ANSI flange outlet connections

Consult factory for Manifold dimensions (SHC,DHC,DEHT2, DEVT2)

Extensive Design Capabilities for OEM and Facility Installations

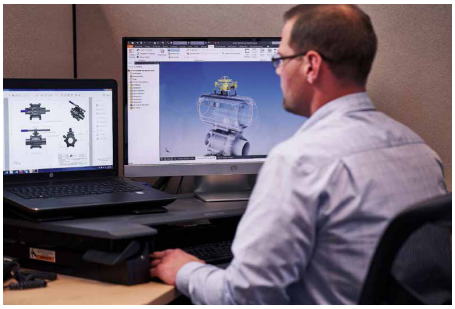

Custom Leak Test Fixture for Assemblies up to 24’ (7m)

Example of Installation in the Field

Evans Components Inc.
7606 SW Bridgeport Road, Portland, OR 97224 USA
Phone 971.249.1600 | Fax 971.249.1601
www.evanscomponents.com

EVANS COMPONENTS

Valve Configurations

Straight 2-Way (STR)

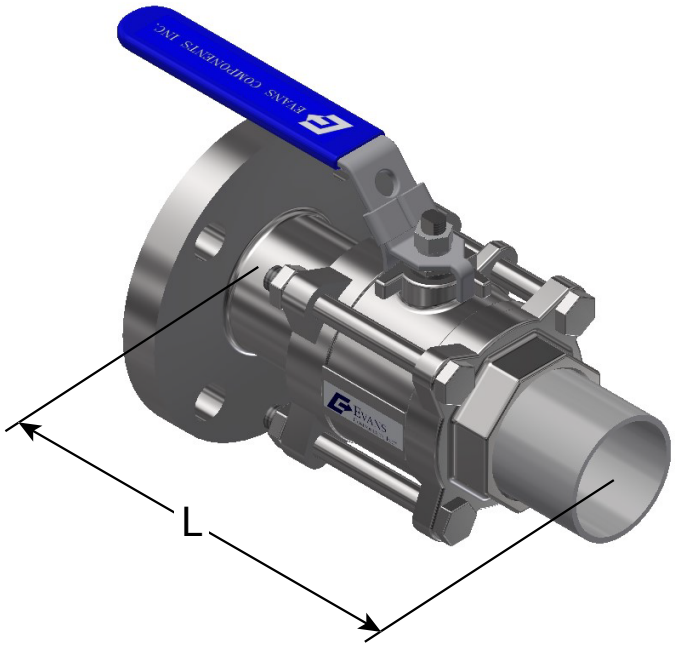

Part Number	Size	DIM "L"
PW-08-08STRGU-XX	1/2"	C/F
PW-12-12STRGU-XX	3/4"	C/F
PW-16-16STRGU-XX	1"	C/F
PW-24-24STRGU-XX	1.5"	C/F
PW-32-32STRGU-XX	2"	C/F
PW-48-48STRGU-XX	3"	C/F
PW-64-64STRGU-XX	4"	C/F

Teflon Valve Rebuild Kits

Part Number	Size
VT-71BSKB	1/4" or 3/8"
VT-71BSKC	1/2"
VT-71BSKD	3/4"
VT-71BSKE	1"
VT-71BSKG	1.5"
VT-71BSKH	2"
VT-71BSKI	2.5"
VT-71BSKJ	3"
VT-71BSKK	4"
VT-71BSKL	6" (RP)

Dimensions are +/- 0.5"
Dimensions are for reference only, certified drawings available upon request
**C/F - Consult Factory*

Evans Components Inc.
7606 SW Bridgeport Road, Portland, OR 97224 USA
Phone 971.249.1600 | Fax 971.249.1601
www.evanscomponents.com

Single Horizontal Cross 1-Valve (SHC1)

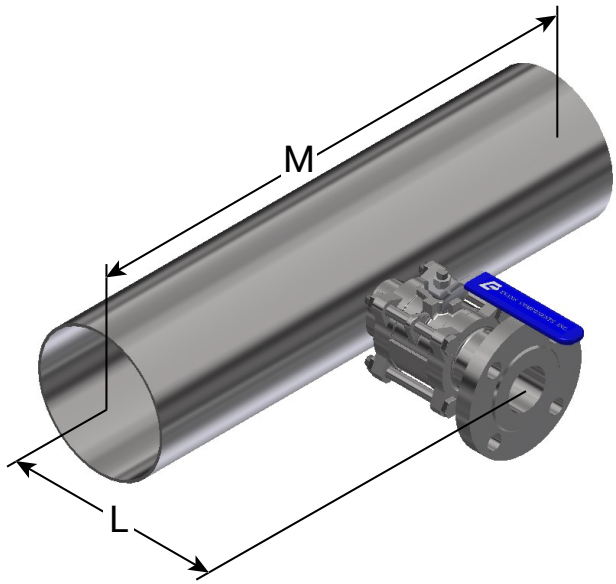

Part Number	Main Size	Branch Size	DIM "L"	DIM "M"
PW-08-48SHC1GU08-24	3"	1/2"	C/F	24"
PW-12-48SHC1GU12-24	3"	3/4"	C/F	24"
PW-16-48SHC1GU16-24	3"	1"	C/F	24"
PW-24-48SHC1GU24-24	3"	1.5"	C/F	24"
PW-32-48SHC1GU32-24	3"	2"	C/F	24"
PW-12-64SHC1GU12-24	4"	3/4"	C/F	24"
PW-16-64SHC1GU16-24	4"	1"	C/F	24"
PW-24-64SHC1GU24-24	4"	1.5"	C/F	24"
PW-32-64SHC1GU32-24	4"	2"	C/F	24"
PW-24-96SHC1GU24-24	6"	1.5"	C/F	24"
PW-32-96SHC1GU32-24	6"	2"	C/F	24"
PW-48-96SHC1GU48-24	6"	3"	C/F	24"
PW-32-128SHC1GU32-24	8"	2"	C/F	24"
PW-48-128SHC1GU48-24	8"	3"	C/F	24"
PW-32-160SHC1GU32-24	10"	2'	C/F	24"
PW-48-160SHC1GU48-24	10'	3'	C/F	24'

Single Horizontal Cross 2-Valve (SHC2)

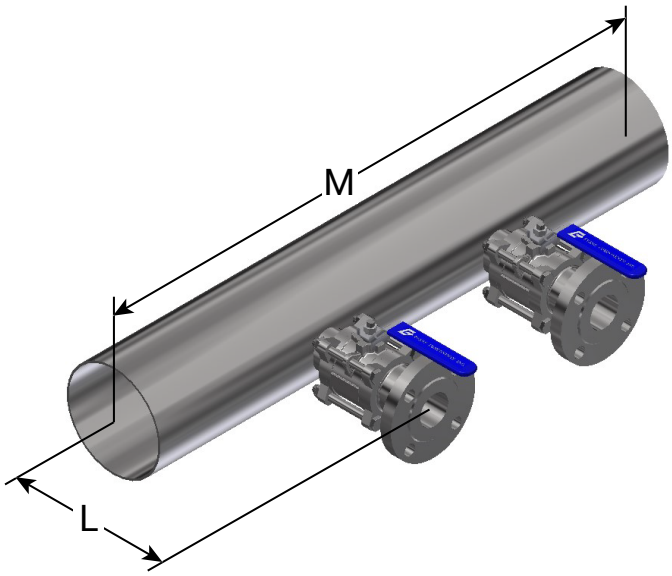

Part Number	Main Size	Branch Size	DIM "L"	DIM "M"
PW-08-48SHC2GU08-36	3"	1/2"	C/F	36"
PW-12-48SHC2GU12-36	3"	3/4"	C/F	36"
PW-16-48SHC2GU16-36	3"	1"	C/F	36"
PW-24-48SHC2GU24-36	3"	1.5"	C/F	36"
PW-32-48SHC2GU32-36	3"	2"	C/F	36"
PW-12-64SHC2GU12-36	4"	3/4"	C/F	36"
PW-16-64SHC2GU16-36	4"	1"	C/F	36"
PW-24-64SHC2GU24-36	4"	1.5"	C/F	36"
PW-32-64SHC2GU32-36	4"	2"	C/F	36"
PW-24-96SHC2GU24-36	6"	1.5"	C/F	36"
PW-32-96SHC2GU32-36	6"	2"	C/F	36"
PW-48-96SHC2GU48-36	6"	3"	C/F	36"
PW-32-128SHC2GU32-36	8"	2"	C/F	36"
PW-48-128SHC2GU48-36	8"	3"	C/F	36"
PW-32-160SHC2GU32-36	10"	2'	C/F	36"
PW-48-160SHC2GU48-36	10'	3'	C/F	36"

Dimensions are +/- 0.5"
Dimensions are for reference only, certified drawings available upon request
**C/F - Consult Factory*

Evans Components Inc.
7606 SW Bridgeport Road, Portland, OR 97224 USA
Phone 971.249.1600 | Fax 971.249.1601
www.evanscomponents.com

Double Horizontal Cross 2-Valve (DHC2)

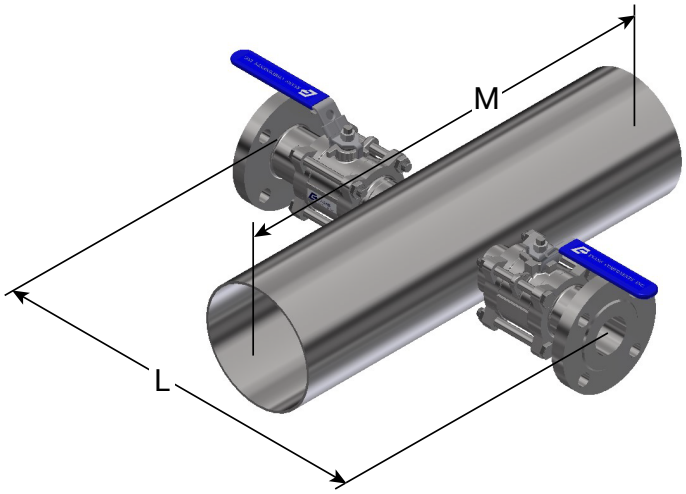

Part Number	Main Size	Branch Size	DIM "L"	DIM "M"
PW-08-48DHC2GU08-24	3"	1/2"	C/F	24"
PW-12-48DHC2GU12-24	3"	3/4"	C/F	24"
PW-16-48DHC2GU16-24	3"	1"	C/F	24"
PW-24-48DHC2GU24-24	3"	1.5"	C/F	24"
PW-32-48DHC2GU32-24	3"	2"	C/F	24"
PW-12-64DHC2GU12-24	4"	3/4"	C/F	24"
PW-16-64DHC2GU16-24	4"	1"	C/F	24"
PW-24-64DHC2GU24-24	4"	1.5"	C/F	24"
PW-32-64DHC2GU32-24	4"	2"	C/F	24"
PW-24-96DHC2GU24-24	6"	1.5"	C/F	24"
PW-32-96DHC2GU32-24	6"	2"	C/F	24"
PW-48-96DHC2GU48-24	6"	3"	C/F	24"
PW-32-128DHC2GU32-24	8"	2"	C/F	24"
PW-48-128DHC2GU48-24	8"	3"	C/F	24"

Double Horizontal Cross 4-Valve (DHC4)

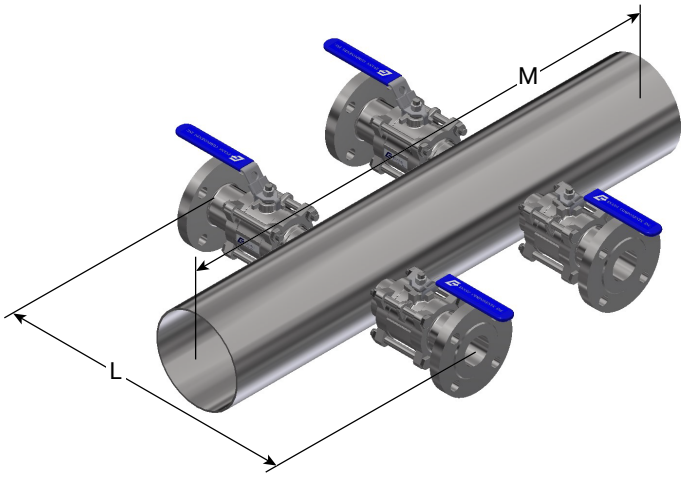

Part Number	Main Size	Branch Size	DIM "L"	DIM "M"
PW-08-48DHC4GU08-36	3"	1/2"	C/F	24"
PW-12-48DHC4GU12-36	3"	3/4"	C/F	24"
PW-16-48DHC4GU16-36	3"	1"	C/F	24"
PW-24-48DHC4GU24-36	3"	1.5"	C/F	24"
PW-32-48DHC4GU32-36	3"	2"	C/F	24"
PW-12-64DHC4GU12-36	4"	3/4"	C/F	24"
PW-16-64DHC4GU16-36	4"	1"	C/F	24"
PW-24-64DHC4GU24-36	4"	1.5"	C/F	24"
PW-32-64DHC4GU32-36	4"	2"	C/F	24"
PW-24-96DHC4GU24-36	6"	1.5"	C/F	24"
PW-32-96DHC4GU32-36	6"	2"	C/F	24"
PW-48-96DHC4GU48-36	6"	3"	C/F	24"
PW-32-128DHC4GU32-36	8"	2"	C/F	24"
PW-48-128DHC4GU48-36	8"	3"	C/F	24"

Dimensions are +/- 0.5"
Dimensions are for reference only, certified drawings available upon request
**C/F - Consult Factory*

Evans Components Inc.
7606 SW Bridgeport Road, Portland, OR 97224 USA
Phone 971.249.1600 | Fax 971.249.1601
www.evanscomponents.com

Double Extended Vertical Tee 2-Valve (DEVT2)

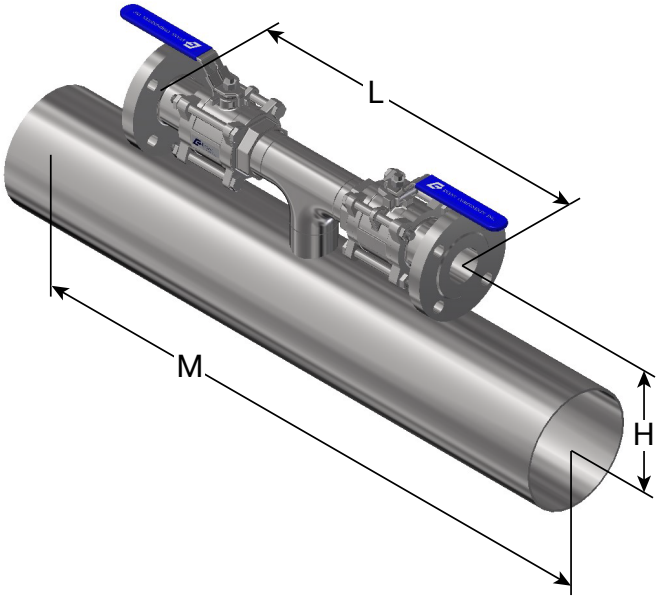

Part Number	Main Size	Branch Size	L	M	H
PW-08-48DEVT2GU08-24	3”	1/2”	C/F	24”	C/F
PW-12-48DEVT2GU12-24	3”	3/4”	C/F	24”	C/F
PW-16-48DEVT2GU16-24	3”	1”	C/F	24”	C/F
PW-24-48DEVT2GU24-24	3”	1.5”	C/F	24”	C/F
PW-12-64DEVT2GU12-24	4”	3/4”	C/F	24”	C/F
PW-16-64DEVT2GU16-24	4”	1”	C/F	24”	C/F
PW-24-64DEVT2GU24-24	4”	1.5”	C/F	24”	C/F
PW-32-64DEVT2GU32-24	4”	2”	C/F	24”	C/F
PW-24-96DEVT2GU24-24	6”	1.5”	C/F	24”	C/F
PW-32-96DEVT2GU32-24	6”	2”	C/F	24”	C/F
PW-48-96DEVT2GU48-24	6”	3”	C/F	24”	C/F
PW-32-128DEVT2GU32-24	8“	2”	C/F	24”	C/F
PW-48-128DEVT2GU48-24	8”	3”	C/F	24”	C/F

Double Extended Horizontal Tee 2-Valve(DEHT2)

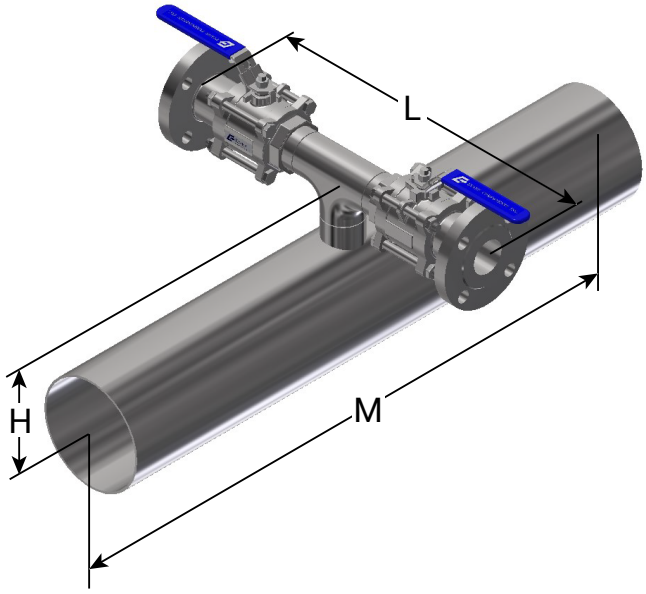

Part Number	Main Size	Branch Size	L	M	H
PW-08-48DEHT2GU08-24	3”	1/2”	C/F	24”	C/F
PW-12-48DEHT2GU12-24	3”	3/4”	C/F	24”	C/F
PW-16-48DEHT2GU16-24	3”	1”	C/F	24”	C/F
PW-24-48DEHT2GU24-24	3”	1.5”	C/F	24”	C/F
PW-12-64DEHT2GU12-24	4”	3/4”	C/F	24”	C/F
PW-16-64DEHT2GU16-24	4”	1”	C/F	24”	C/F
PW-24-64DEHT2GU24-24	4”	1.5”	C/F	24”	C/F
PW-32-64DEHT2GU32-24	4”	2”	C/F	24”	C/F
PW-24-96DEHT2GU24-24	6”	1.5”	C/F	24”	C/F
PW-32-96DEHT2GU32-24	6”	2”	C/F	24”	C/F
PW-48-96DEHT2GU48-24	6”	3”	C/F	24”	C/F
PW-32-128DEHT2GU32-24	8“	2”	C/F	24”	C/F
PW-48-128DEHT2GU48-24	8”	3”	C/F	24”	C/F

Dimensions are +/- 0.5”
Dimensions are for reference only, certified drawings available upon request
**C/F - Consult Factory*

Evans Components Inc.
7606 SW Bridgeport Road, Portland, OR 97224 USA
Phone 971.249.1600 | Fax 971.249.1601
www.evanscomponents.com

Bill Of Materials

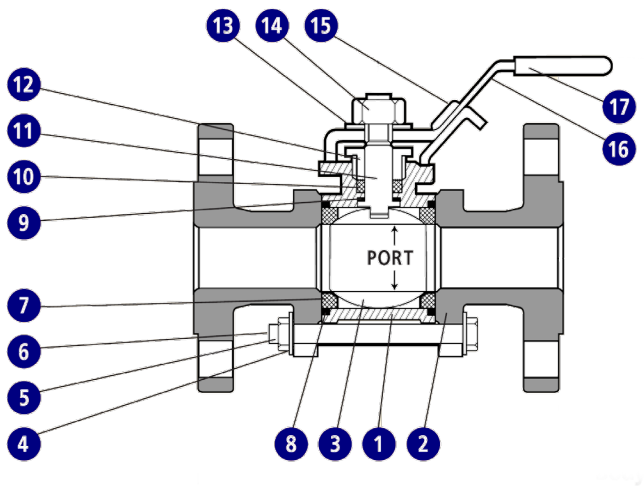

Item	Description	Material
1	Body	CF8/CF8M
2	End Cap-Flange	CF8/CF8M
3	Ball	SS316
4	Bolt Washers	SS304
5	Bolt Nuts	SS304
6	Bolt	SS304
7	Seat	RTFE
8	Body Seal	PTFE
9	Thrust Washer	PTFE
10	Stem Seal	PTFE
11	Stem	SS316
12	Gland Nut	SS304
13	Handle Washer	SS304
14	Handle Nut	SS304
15	Locking Pad	SS304
16	Handle	SS304
17	Handle Cover	Plastic

Pressure/Temperature Chart

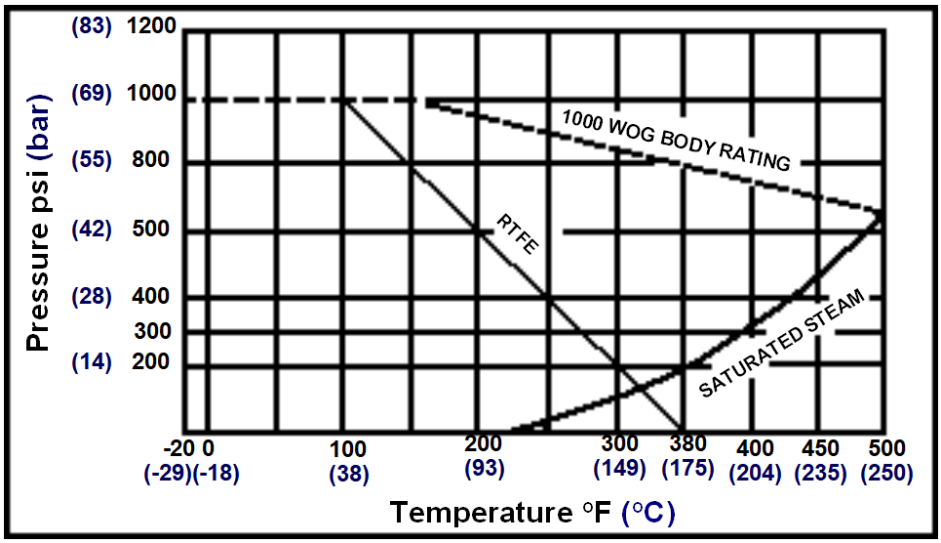

Evans Components Inc.
7606 SW Bridgeport Road, Portland, OR 97224 USA
Phone 971.249.1600 | Fax 971.249.1601
www.evanscomponents.com

EVANS COMPONENTS

Straight 2-Way Valve Dimensions

Double Flange

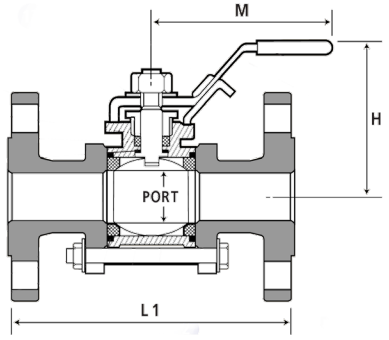

Flange x SCH 10S Pipe**

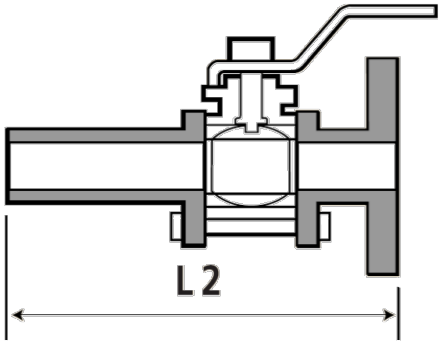

SCH 10S Pipe Extension**

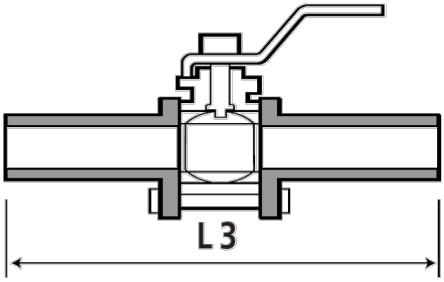

Female NPT / Socket Weld

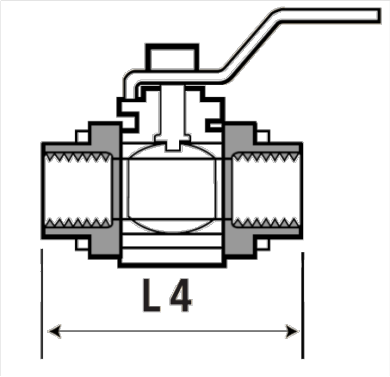

Compression End

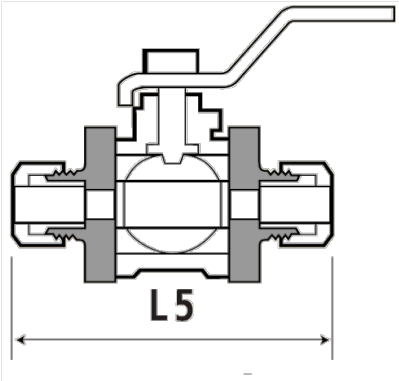

Tube Extension

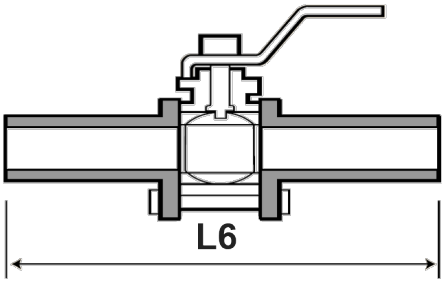

Size	Port	M	H	L1	L2	L3	L4	L5	L6
1/4”	0.39	4	2	N/A	N/A	N/A	C/F	3.35	C/F
3/8”	0.47	4	2	N/A	N/A	N/A	C/F	3.35	C/F
1/2”	0.63	4.5	2.5	5.12	5.96	6.80	2.95	3.60	C/F
3/4”	0.78	5	2.5	6.01	6.51	7.02	3.07	4.04	C/F
1”	0.98	6	3.25	5.84	6.60	7.37	3.36	4.32	C/F
1-1/2”	1.57	7.5	3.75	7.83	7.65	10.90	4.72	C/F	C/F
2”	1.97	7.5	4	9.17	8.43	11.40	5.16	C/F	C/F
2-1/2”	2.56	10	5.25	10.98	11.19	11.40	C/F	N/A	C/F
3”	3.15	10	5.5	11.32	11.30	11.36	7.17	N/A	C/F
4”	3.93	11.5	7.5	13.72	12.36	14.84	C/F	N/A	C/F
6” RP	C/F	21	10.5	13.75	13.50	13.25	C/F	N/A	C/F
6” FP	C/F	21	11.25	16.06	15.81	15.56	C/F	N/A	C/F

Dimensions are +/- 0.125” for straight 2-way valves. Dimensions are for reference only, certified drawings available upon request.
**C/F - Consult Factory*
***For Pipe other than SCH10S, consult factory for lengths.*

Evans Components Inc.
7606 SW Bridgeport Road, Portland, OR 97224 USA
Phone 971.249.1600 | Fax 971.249.1601
www.evanscomponents.com

EVANS COMPONENTS

EVANS PW SERIES

Part Number Matrix

EXAMPLE: PW - 32 - 64 DHC2 G U 32 - 144 - PVC - KE
1 - 2 - 3 4 5 6 7 - 8 - 9 - 10

Above part number describes a 4" X 2" Double Horizontal Cross, 4" 304L Schedule 10 pipe main beveled to a knife edge, 144" long, 2" ball valve with 150 lb flange outlet connections, PVC blind cap.

1. Series Designator
PW - PW Series
PWH - CFOS Cleaned PW Series

2. Valve Size
04 - 1/4"
06 - 3/8"
08 - 1/2"
12 - 3/4"
16 - 1"
24 - 1.5"
32 - 2"
40 - 2.5"
48 - 3"
64 - 4"
96 - 6"

3. Inlet Size Designator
(Inlet/Outlet 2-way valves, main pipe/tube for integrated valve assemblies)
04 - 1/4"
06 - 3/8"
08 - 1/2"
12 - 3/4"
16 - 1"
24 - 1.5"
32 - 2"
40 - 2.5"
48 - 3"
64 - 4"
96 - 6"
128 - 8"
160 - 10"
192 - 12"

4. Valve Assembly Pattern
(Custom Patterns Available. Please consult factory)
STR - Straight 2-way
SHC1 - Single Horizontal Cross (1 valve)
SHC1-90 - Single Horizontal Cross (1 valve 90° handle orientation)
SHC2 - Single Horizontal Cross (2 valve)
SHC2-90 - Single Horizontal Cross (2-valve 90° handle orientation)
DHC2 - Double Horizontal Cross (2 valves)
DHC4 - Double Horizontal Cross (4 valves)
DEHT2 - Double Extended Horizontal Tee (2 valves)
DEVT2 - Double Extended Vertical Tee (2 valves)

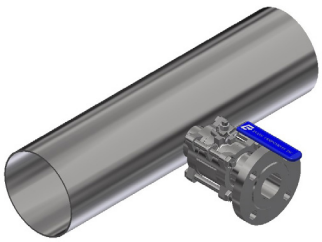

SHC1 Orientation

SHC1-90 Orientation

5. Inlet Valve Connection Designator
C - Compression Fitting
E - Pipe Socket Weld
F - Female NPT
G - 304L SCH10S Pipe
L - 316L SS Sch. 10 Pipe
PL - Presslok
W - 304L SS Tube
M - 316L SS Tube
U - ANSI Raised Face 150# Flange

6. Outlet Valve Connection Designator
C - Compression Fitting
E - Pipe Socket Weld
F - Female NPT
G - 304L SCH10S Pipe
L - 316L SS Sch. 10 Pipe
PL - Presslok
W - 304L SS Tube
M - 316L SS Tube
U - ANSI Raised Face 150# Flange

7. Outlet Size Designator (Integrated Valves Only)
04 - 1/4"
06 - 3/8"
08 - 1/2"
12 - 3/4"
16 - 1"
24 - 1.5"
32 - 2"
40 - 2.5"
48 - 3"
64 - 4"
96 - 6"

8. Length of Main Designator / Inches (Manifold Valves Only)
Maximum length 288", 24ft (7m)
Enter Length in inches

9. Additional Options
PVC - PVC ANSI 150# Blind Flange bolted to outlet connection
SS - 304SS ANSI 150# Blind Flange bolted to outlet connection

10. Pipe Main End Prep Options (skip for STR valves)
KE - Pipe Main Beveled to Knife Edge
BV - Pipe Main Beveled Ends w/ landing
SQ - Pipe Main Square Cut/Face Ends
(Other options available on request)

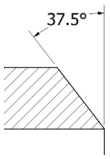

KE - Knife Edge

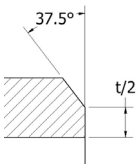

BV - Beveled w/ Landing

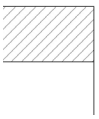

SQ - Square Cut

Evans Components Inc.
7606 SW Bridgeport Road, Portland, OR 97224 USA
Phone 971.249.1600 | Fax 971.249.1601
www.evanscomponents.com

Ball Valve

w/ HB x HB or Union Ends
Valves listed below are not listed in part number matrix

Evans Ball Valve

w/ Hose Barb Ends

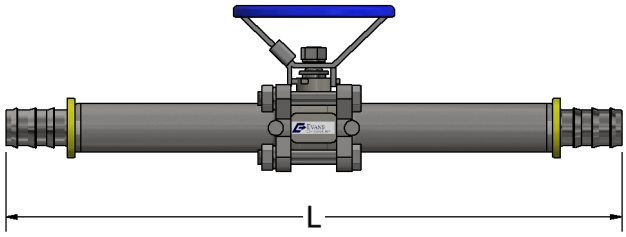

PART NUMBER	SIZE	L
PW-08-STRHB-2-TS-OH	1/2”	8.52
PW-12-STRHB-2-TS-OH	3/4”	13.36
PW-16-STRHB-2-TS-OH	1”	12.06

Evans Ball Valve

w/ Union Ends

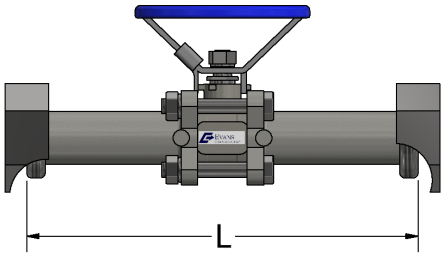

PART NUMBER	SIZE	L
PW-08-STRA-2-TS-OH	1/2”	6.81
PW-12-STRA-2-TS-OH	3/4”	7.83
PW-16-STRA-2-TS-OH	1”	9.60
PW-24-STRRA-2-TS-OH	1.5”	11.87
PW-32-STRRA-2-TS-OH	2”	12.38

Evans Ball Valve

w/ Union Ends, Bidicator

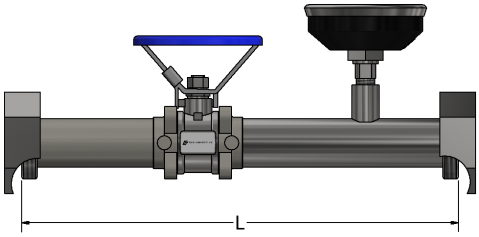

PART NUMBER	SIZE	L
PW-08-STRA-2-TS-PT-OH	1/2”	10.27
PW-12-STRA-2-TS-PT-OH	3/4”	10.89
PW-16-STRA-2-TS-PT-OH	1”	11.89
PW-24-STRRA-2-TS-PT-OH	1.5”	13.69
PW-32-STRRA-2-TS-PT-OH	2”	14.47

Evans Integrated Pressure / Temperature Gauge

“Bi-Dicator” 0-160psig (0-11 bar) / 0-140° F (-20-60°C)

Dimensions are +/- 0.5”
Dimensions are for reference only, certified drawings available upon request
**C/F - Consult Factory*

Evans Components Inc.
7606 SW Bridgeport Road, Portland, OR 97224 USA
Phone 971.249.1600 | Fax 971.249.1601
www.evanscomponents.com

PW Stick Union Adapters

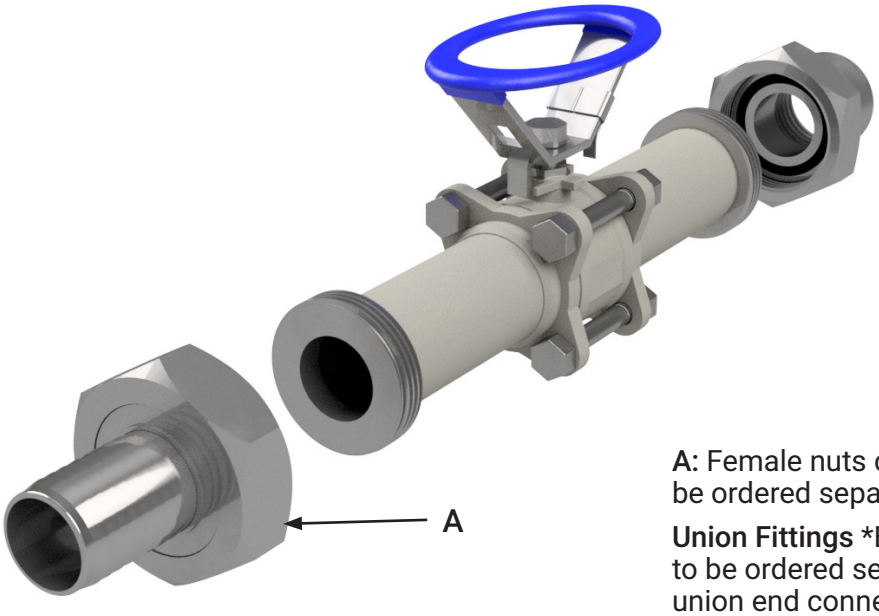

A: Female nuts come supplied with sticks, fittings to be ordered separately

Union Fittings *End connection fittings on this page to be ordered separately for valves supplied with union end connections.

Union Adapter Bill of Materials

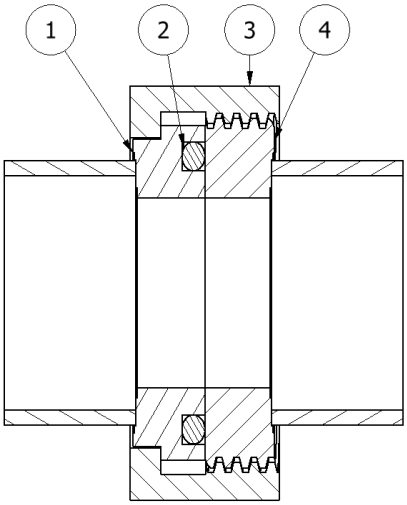

ITEM	DESCRIPTION	MATERIAL
1	WAFER	304 S.S.
2	O-RING	EPDM
3	NUT	304 S.S.
4	THREADED WAFER	304 S.S.

Evans Components Inc.
7606 SW Bridgeport Road, Portland, OR 97224 USA
Phone 971.249.1600 | Fax 971.249.1601
www.evanscomponents.com

PW Stick Hose Barb Union Adapters

304SS HOSE BARB
ELBOW x SS O-Ring Wafer

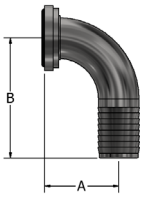

PART NUMBER	HB Size	WAFER SIZE	DIM "A"	DIM "B"
PW-08HB-ET-OW	1/2"	1/2"	C/F	C/F
PW-12HB-ET-OW	3/4"	3/4"	C/F	C/F
PW-16HB-ET-OW	1"	1"	C/F	C/F
PW-24HB-ET-20OW	1.5"	1.5" R	2.7"	C/F
PW-32HB-ET-28OW	2"	2" R	3.4"	C/F

304SS HOSE BARB
45° ELBOW x SS O-Ring Wafer

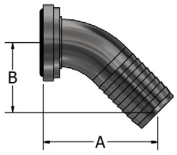

PART NUMBER	HB Size	WAFER SIZE	DIM "A"	DIM "B"
PW-08HB-ET-OW	1/2"	1/2"	C/F	C/F
PW-12HB-ET-OW	3/4"	3/4"	C/F	C/F
PW-16HB-ET-OW	1"	1"	C/F	C/F
PW-24HB-ET-20OW	1.5"	1.5" R	2.7"	C/F
PW-32HB-ET-28OW	2"	2" R	3.4"	C/F

304SS HOSE BARB
x SS O-Ring Wafer

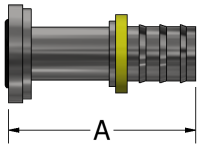

Part Number	HB Size	WAFER SIZE	DIM "A"
PW-08HB-OW	1/2"	1/2"	2.54
PW-12HB-OW	3/4"	3/4"	2.98
PW-16HB-OW	1"	1"	3.53
PW-24HB-20OW	1.5"	1.5" R	2.7"
PW-32HB-28OW	2"	2" R	2.9"

1/4"-1" hose barb designed for push-lok style hose, no clamp required

1.5"-3" hose barb designed for king nipple style hose, clamps required (king nipple style hose barbs available for 1/4"-1" upon request)

Evans Components Inc.
7606 SW Bridgeport Road, Portland, OR 97224 USA
Phone 971.249.1600 | Fax 971.249.1601
www.evanscomponents.com

EVANS COMPONENTS

PW Stick Union Adapters

304SS TUBE
x SS O-Ring Wafer

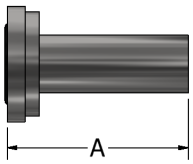

Part Number	Tube Size	WAFER SIZE	DIM "A"
PW-08T-OW	1/2"	1/2"	C/F
PW-12T-OW	3/4"	3/4"	2.35
PW-16T-OW	1"	1"	C/F
PW-24T-20OW	1.5"	1.5" R	1.99
PW-32T-28OW	2"	2" R	2.93
PW-40T-OW	2.5"	2.5"	C/F
PW-48T-OW	3"	3'	C/F

SCH5S S.S. PIPE
x SS O-Ring Wafer

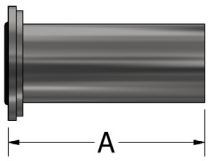

Part Number	Pipe Size	WAFER SIZE	DIM "A"
PW-08G5-OW	1/2"	1/2"	C/F
PW-12G5-OW	3/4"	3/4"	C/F
PW-16G5-OW	1"	1"	C/F
PW-24G5-20OW	1.5"	1.5" R	C/F
PW-32G5-28OW	2"	2" R	C/F
PW-40G5-OW	2.5"	2.5"	C/F
PW-48G5-OW	3"	3'	C/F

304SS PRESSLOK
x SS O-Ring Wafer

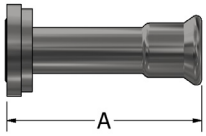

Part Number	Presslok Size	WAFER SIZE	DIM "A"
PW-08PL-OW	1/2"	1/2"	C/F
PW-12PL-OW	3/4"	3/4"	3.17
PW-16PL-OW	1"	1"	C/F
PW-24PL-20OW	1.5"	1.5" R	C/F
PW-32PL-28OW	2"	2" R	C/F
PW-40PL-40OW	2.5"	2.5"	C/F
PW-48PL-48OW	3"	3"	C/F
PW-64PL-48OW	4'	3"	C/F

304SS COMPRESSION
x SS O-Ring Wafer

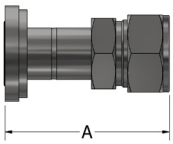

Part Number	Presslok Size	WAFER SIZE	DIM "A"
PW-08C-OW	1/2"	1/2"	C/F
PW-12C-OW	3/4"	3/4"	C/F
PW-16C-OW	1"	1"	3.18

Evans Components Inc.
7606 SW Bridgeport Road, Portland, OR 97224 USA
Phone 971.249.1600 | Fax 971.249.1601
www.evanscomponents.com

EVANS COMPONENTS

PW Stick Union Adapters

304SS FNPT FTG

x SS O-Ring Wafer

Part Number	FNPT Size	WAFER SIZE	DIM "A"
PW-08F-OW	1/2"	1/2"	1.09
PW-12F-OW	3/4"	3/4"	1.97
PW-16F-OW	1"	1"	2.16
PW-24F-20OW	1.5"	1.5" R	2.24
PW-32F-28OW	2"	2" R	2.19
PW-40F-OW	2.5"	2.5"	C/F
PW-48F-OW	3"	3'	C/F

304SS MNPT FTG

x SS O-Ring Wafer

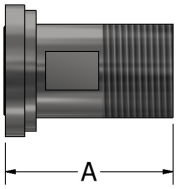

Part Number	MNPT Size	WAFER SIZE	DIM "A"
PW-08M-OW	1/2"	1/2"	2.35
PW-12M-OW	3/4"	3/4"	2.34
PW-16M-OW	1"	1"	2.35
PW-24M-20OW	1.5"	1.5" R	2.59
PW-32M-28OW	2"	2" R	2.94
PW-40M-OW	2.5"	2.5"	C/F
PW-48M-OW	3"	3'	C/F

304SS PIPE SOCKET

x SS O-Ring Wafer

Part Number	Pipe Socket Size	WAFER SIZE	DIM "A"
PW-08E-OW	1/2"	1/2"	C/F
PW-12E-OW	3/4"	3/4"	C/F
PW-16E-OW	1"	1"	C/F
PW-24E-20OW	1.5"	1.5" R	C/F
PW-32E-28OW	2"	2" R	C/F

Evans Components Inc.
7606 SW Bridgeport Road, Portland, OR 97224 USA
Phone 971.249.1600 | Fax 971.249.1601
www.evanscomponents.com

EVANS COMPONENTS

Learn more about related Evans Products

EVANS COMPONENTS

www.evanscomponents.com

7606 SW Bridgeport Road
Portland, Oregon 97224
Office 971.249.1600
Fax 971.249.1601

NOTE: Product availability and specifications contained herein are subject to change without notice.
Consult local distributor or factory for potential revisions.