EVANS COMPONENTS

Evans DM Series

CAr/N2 Purge Tools + Purge Stations

Features

- Lower cost than welded stainless assemblies.
- Fewer connections and welds give unmatched leak integrity and purity.
- Superior purgeability and improved dry-down characteristics.
- Helium leak tested to 1 x 10-9 scc/sec

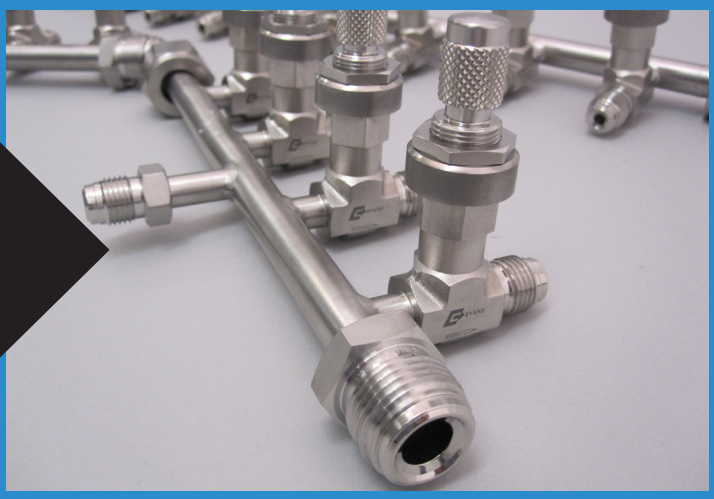

Evans DM Series

CAr Purge Tools

Evans Components provides an economical, reliable and more compact solution to purge gas delivery for high-purity welding and testing in semiconductor applications. The convenient to use Evans Purge Tool, and Purge Station, directly replaces costly multi-component arrays with an exclusive "Integrated Machined Manifold" design (see below). All components are integrated into a single compact, lightweight unit which eliminates assembly time, reduces potential hazing and discoloration of weld zones, and improves reliability. All Evans Purge Tools and Purge Stations are UHP cleaned and packaged in a clean room environment.

Features

- Lower cost than conventional stainless assemblies.
- Fewer mechanical connections and welds give unmatched leak integrity and purity.
- Superior purgeability and improved dry-down characteristics.
- Guaranteed dry-down to less than 10 ppb
- Compact/Lightweight
- Solid one-piece flow meter manifold design
- 100% helium leak tested, 1x10-9
- Each flowmeter rated to a maximum flow rate of 110 scfh/52 slpm
- Assembly is rated to 225 psig (15 bar)
- 10 Ra electro polished stainless fittings

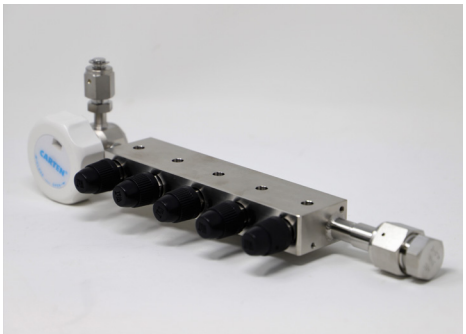

Solid one-piece UHP flow meter manifold eliminates potential of O2 contamination

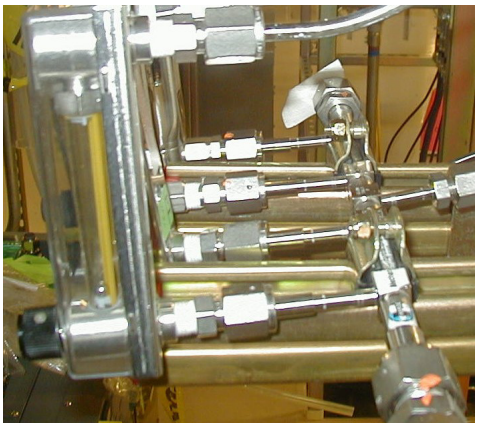

Eliminate potential of O2 contamination (leakage) from NPT connections

Evans Components Inc.
7606 SW Bridgeport Road, Portland, OR 97224 USA
Phone 971.249.1600 | Fax 971.249.1601
www.evanscomponents.com

EVANS COMPONENTS

Part Number Matrix

EXAMPLE: DM - UHP - FM5 - G - V - X
1 - 2 - 3 - 4 - 5 - 6

1. Series Designator

DM - DM Series

2. Cleaning

UHP - Class 100 Cleaning and Packaging

3. Flowmeters

FM5 - 5 Bank Flowmeter

4. Gauge

G - UHP Gauge
X - No Gauge

5. Valve

V - 1/2" Diaphragm Valve
X - No Valve

6. Options

R - UHP Regulator
F - 0.01µm Filter, SS Elemt (75 splm) At each Flowmeter Outlet Connection
X - No Options

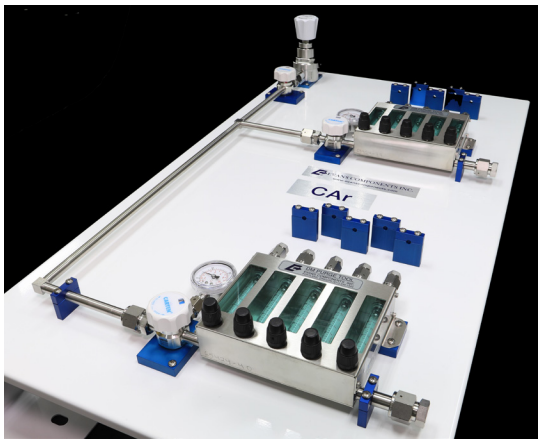

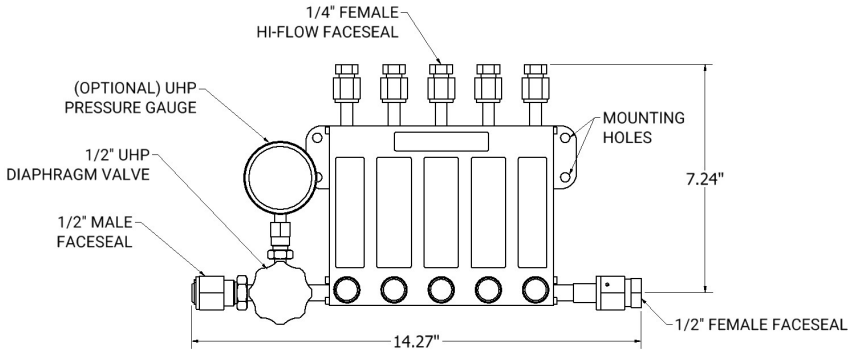

HIGH PURITY PURGE TOOL (DM SERIES)

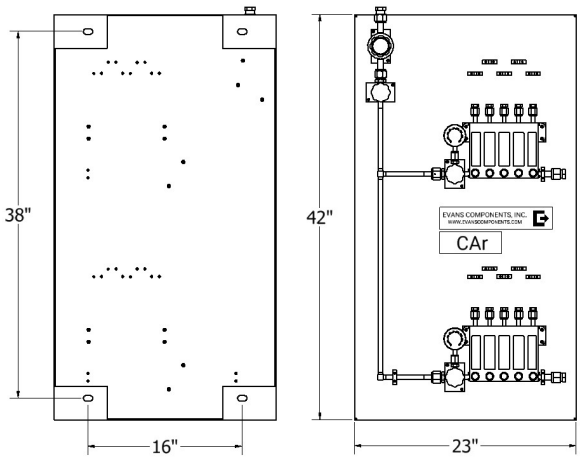

CAr PURGE STATION
PART NUMBER: DM-UHP-8VF5-2

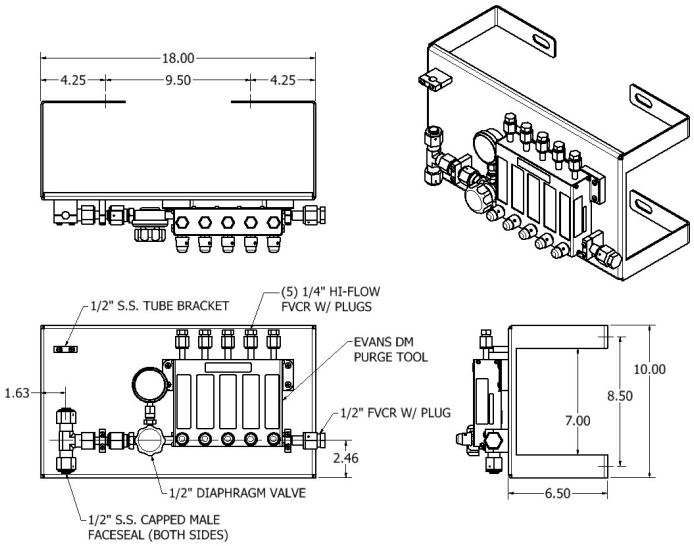

DM PURGE TOOL WITH SUPPORT BRACKET
PART NUMBER: DM-UHP-FM5-G-V-BKT-9IN

Evans Components Inc.
7606 SW Bridgeport Road, Portland, OR 97224 USA
Phone 971.249.1600 | Fax 971.249.1601
www.evanscomponents.com

EVANS COMPONENTS

Evans DM Series

Purified N2 Purge Station

Evans purified N2 purge station is designed for mounting onto the column in the sub-fab for use in manifolding purified utility Nitrogen for purge gas, blow down and line qualification. Utilizing purified utility Nitrogen as a source saves in excess of 10X cost vs. Argon. Purge stations available with 5 or 10 POC's. POU purifier/filters are offered in two sizes

Features

- 80% fewer mechanical/weld connections
- Elimination of NPT connections
- Guaranteed dry down to less than 10 ppb moisture
- Helium leak tested to 1 X 10-9 scc/sec
- Lower cost than conventional fabricated systems using multiple fittings
- Custom brackets for column mounting
- UHP cleaned flow meters provide visual indication of flow
- Reduced footprint
- Two purifier/filter options (250 slpm or 500 slpm)
- UHP check valves (inlet/outlet of purifier)

Evans Components Inc.
7606 SW Bridgeport Road, Portland, OR 97224 USA
Phone 971.249.1600 | Fax 971.249.1601
www.evanscomponents.com

EVANS COMPONENTS

DM Purified N2 Gas Purge Panels

Purifier/Filter Specifications/Options

- Purification & removal capabilities:
- H2O, O2, CO2, H2, less than 100 ppbV
- Acids, Organics, Refractory compounds, less than 1 pptV
- Bases, less than 5 pptV
- Fully regenerable
- DG-UN2881 Class 4.2 classification
- Max operating pressure 250 psig (17.3 barg @ 40C)
- Integrated 0.003 micron metal filter
- 10 Ra electropolished

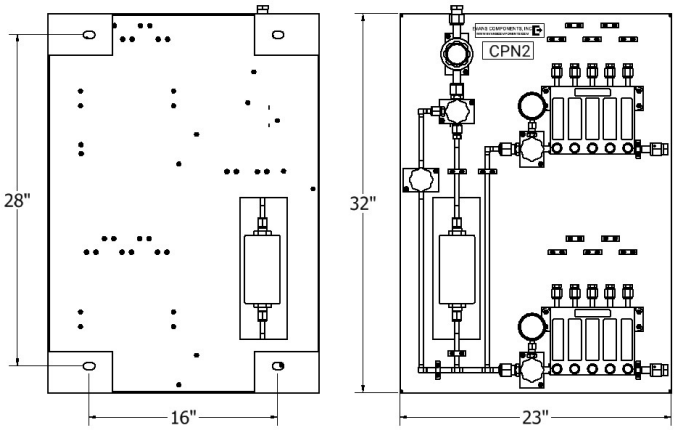

CPN2 PURGE STATION
PART NUMBER: DM-UHP-60-8VF5-2

Part Number Designator (purifier)

- 60 - 60 slpm max flow/nominal flow of 9 slpm
  8.20" (208.3 mm) overall length
- 250 - 250 slpm max flow/nominal flow of 40 slpm
  18.20" (462.3 mm) overall length
- 500 - 500 slpm max flow/nominal flow of 80 slpm
  20" (508.0 mm) overall length

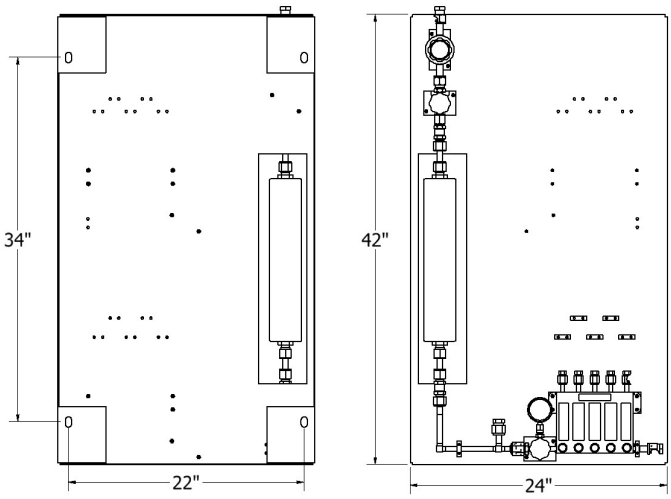

PUN2 PURGE STATION
PART NUMBER: DM-UHP-500-8VF5-1-PUN2

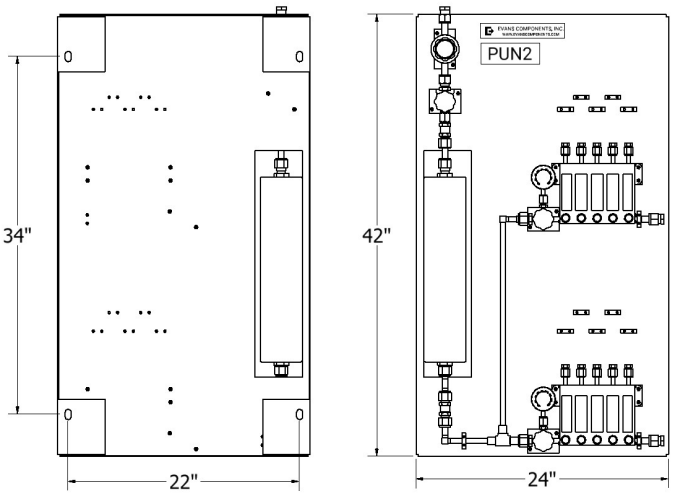

PUN2 PURGE STATION
PART NUMBER: DM-UHP-500-8VF5-2-PUN2

Evans Components Inc.
7606 SW Bridgeport Road, Portland, OR 97224 USA
Phone 971.249.1600 | Fax 971.249.1601
www.evanscomponents.com

EVANS COMPONENTS

Evans CA Series

Purge Metering Manifold

Evans Components provides an economical, reliable and more compact solution for construction purge gas metering used in high-purity welding and testing. The Evans Metering Manifold replaces costly multi-component assemblies with an all welded "Integrated Manifold" design. All components are integrated into a single compact, lightweight unit which eliminates assembly time, reduces number of mechanical connections/welds, and cost. Elimination of the number of mechanical connections reduces risk of potential hazing and discoloration of weld zones, and improves reliability. All Evans Metering Manifolds are UHP cleaned, packaged in a clean room and 100% helium leak tested.

Features

- Lower cost than conventional assemblies.
- Fewer mechanical connections and welds provide unmatched leak integrity.
- Improved dry-down characteristics.
- Compact design provides room for up to 8-metering valves with 16" OAL, thus fitting on standard sub-fab columns
- Welded metering valves eliminate potential of removal/leakage
- Helium leak tested to 1 x 10-9 scc/sec

Part Number Matrix

EXAMPLE: **CA - 4M - 8V - 4HV - X**
1 - 2 - 3 - 4 - 5

1. Series Designator

CA - CA Series

2. Valves

4M - 4 Metering valves
4MC - 4 Valves/ VCR caps
8M - 8 Metering valves
8MC - 8 Valves/ VCR caps

3. Manifold

8V - 1/2" Manifold with MVCR x FVCR connections
8VC - 1/2" Manifold with VCR cap/plug

4. Inlet

4HV - 1/4" High flow MVCR inlet branch connections
8HV - 1/2" MVCR inlet branch connection
X - No branch connection

5. Options

R - UHP Regulator
G - UHP 0-160 PSIG Pressure Gauge
BKT - Panel Mounted
08DV - 1/2" diaphragm valve (inlet)
X - No Options

Evans Components Inc.
7606 SW Bridgeport Road, Portland, OR 97224 USA
Phone 971.249.1600 | Fax 971.249.1601
www.evanscomponents.com

Dimensions / Materials of Construction

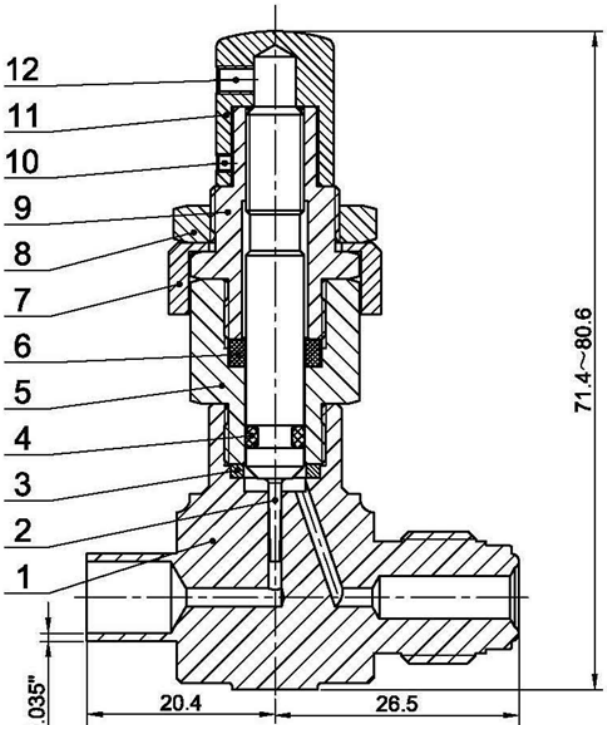

Item	Component	Material
1	Body	316SS/A182
2	Stem	316SS/A479
3	Body Seal	FKM
4	O-ring	FKM
5	Body Extension	316SS/A479
6	Stem Guide Ring	Glass-filled PTFE
7	Bonnet Sleeve	316SS/A182
8	Panel Mount Nut	316SS/B783
9	Bonnet	316SS/A479
10	Lock Screw	Stainless Steel
11	Handle	304SS/A276
12	Handle Screw	Stainless Steel

Stainless tag for optional customer marking

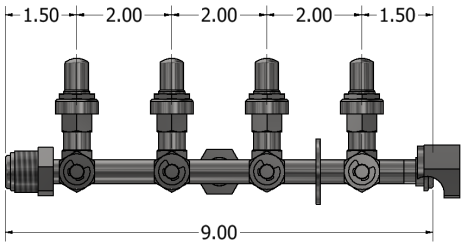

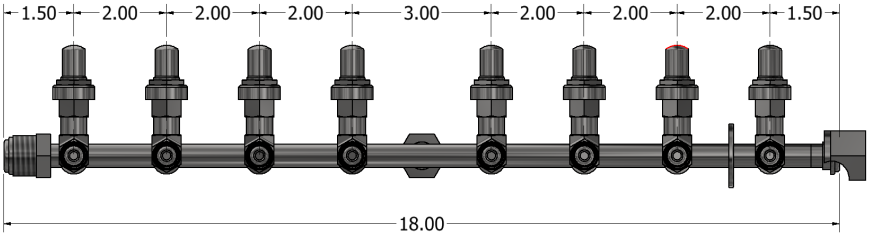

Important Specifications for Metering Valve

- Max working pressure: 1000 psig (68.9 bar)
- Working temperature: -10F to 400F (-23C to 204C)
- Flow coefficient (Cv): 0.03
- Orifice size: 0.056 in (1.42 mm)
- Stem taper: 3
- Turns to open: 8 to 10
- Handle type: Vernier
- Bubble tight shutoff not available

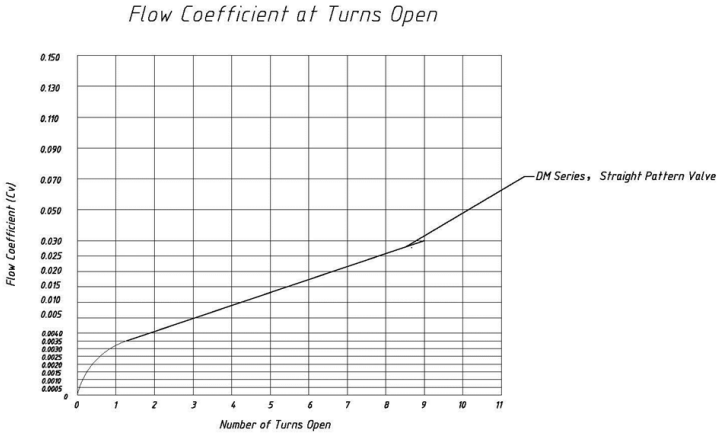

Evans Components Inc.
7606 SW Bridgeport Road, Portland, OR 97224 USA
Phone 971.249.1600 | Fax 971.249.1601
www.evanscomponents.com

EVANS COMPONENTS

Learn more about related Evans Products

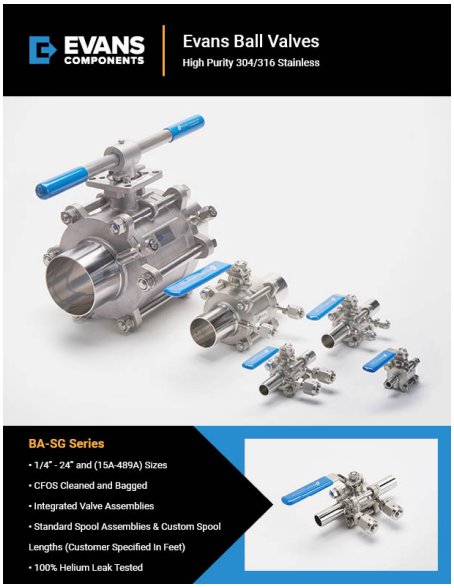

EVANS COMPONENTS

www.evanscomponents.com

7606 SW Bridgeport Road
Portland, Oregon 97224
Office 971.249.1600
Fax 971.249.1601

NOTE: Product availability and specifications contained herein are subject to change without notice.
Consult local distributor or factory for potential revisions.