EVANS COMPONENTS

Evans FR Series

Fire Rated Ball Valves

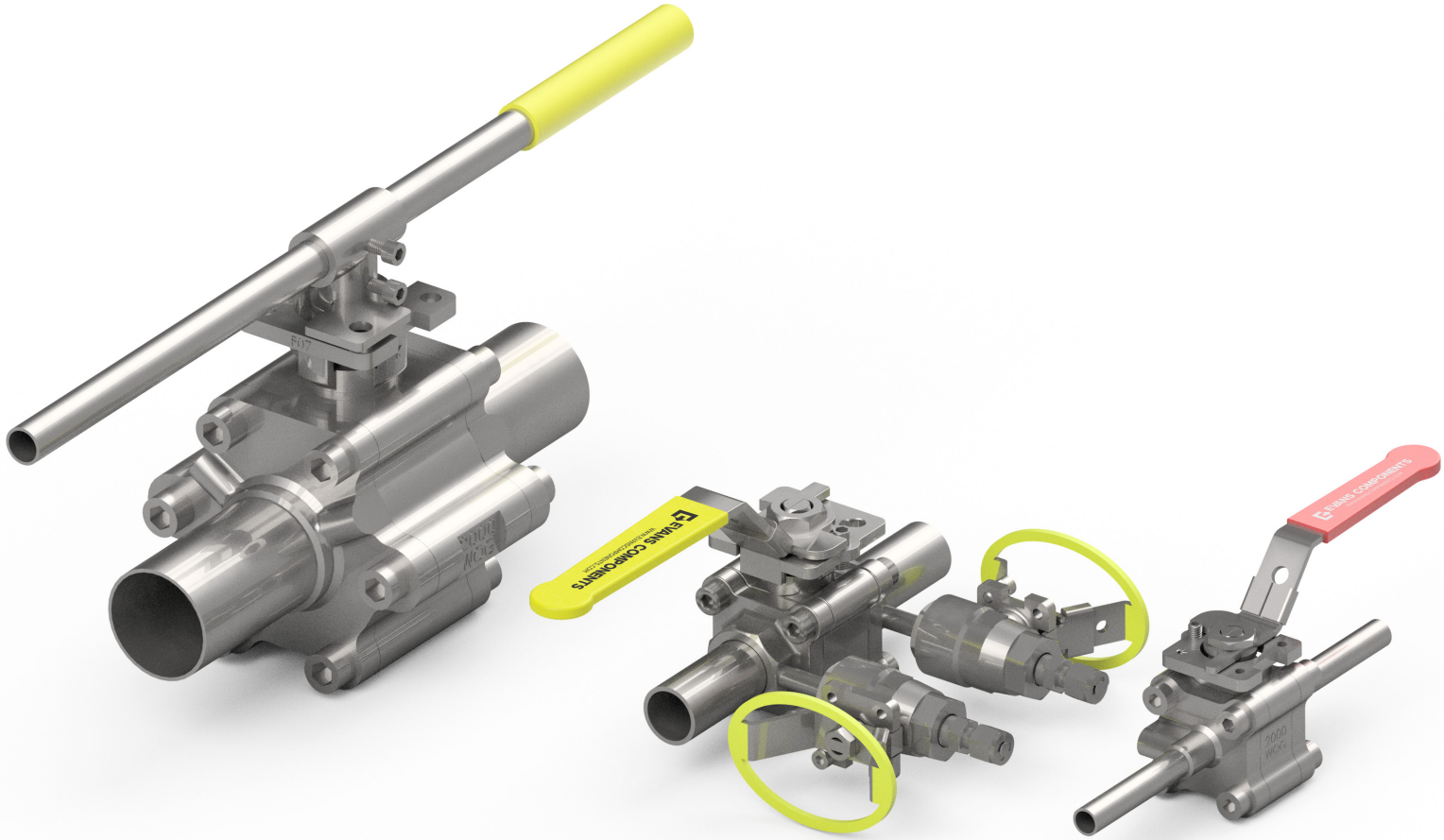

Features

- Size Range: 1/4” - 4” (DN08—DN100)
- Pressure Range: 2000 psig
- Upstream Vented Ball
- Cavity Free PTFE Seats
- 100% Helium Leak Tested
- Locking Lever Handle , optional stem extension
- API607 4th Approved
- Optional Air Actuator, Limit Switch, Solenoid Assist Valves
- Optional Purge Ports/Valves

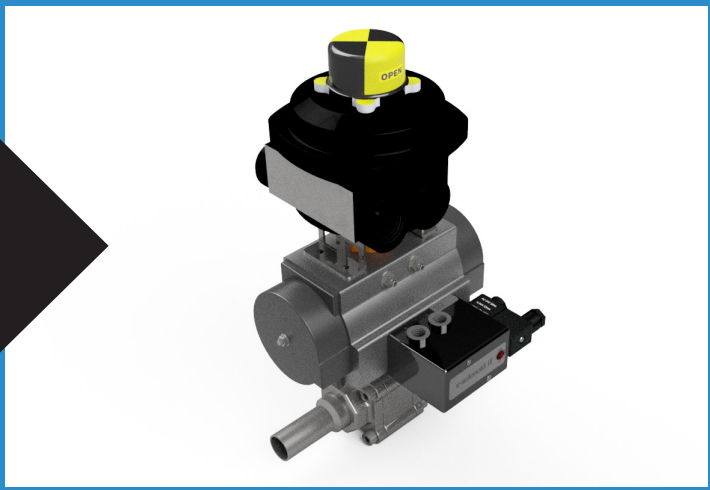

Fire Rated Ball Valves

Evans Components, Inc. was the first to introduce a High Purity Valve for use in the Semiconductor marketplace. Today we are a market leader in providing innovative fluid handling solutions, serving the Semiconductor, Lithium Battery, Bio-Pharm, Solar and Flat Panel markets. ECI currently offers 1/4" - 4" API 607 approved fire rated 3-pc ball valves, all FR Series valves come standard with upstream vented ball, cavity free RTFE seats and ISO 5211 actuator mounting pad, purge ports are optional.

Specifications

Size Range	1/4" - 4" (DN08—DN100)
Service Application	Electrolyte, NMP, Gas, Thermal Fluids, Chemicals, etc.
Pressure Rating	2000 PSI (138 Bar)
Materials	316 Stainless Steel
Certifications	ISO 9001, PED 97/23/EC
End Connection	Pipe Socket, Pipe Extension, Tube Extension, ANSI Flange
Special Features	Vented upstream ball, PTFE Cavity Free Seats
Temperature Rating	-20F (-29C) to 356F (180C)
Surface Finish	30Ra Max
***Body Marking**	Directional flow arrow

*Important to install valve following directional flow arrow marked on center body. Valves only rated for pressure on upstream side, due to upstream vented ball design

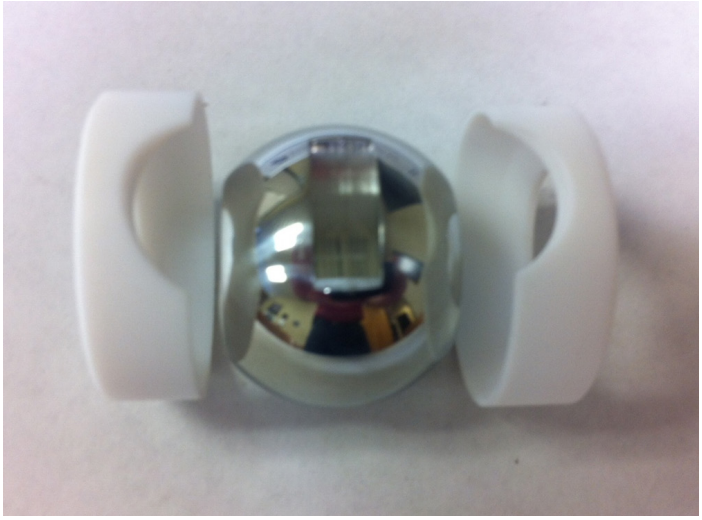

PTFE Cavity Free Seats (standard)

PERFORMANCE SPECIFICATIONS			
2000psi			
Test Pressure	Shell Test	20.7	Mpa
	Back Seal Test		
	Seal Test	15.2	
	Air Test	0.6	
Suitable Temp.	minus 29°C to 180°C		
Suitable Media	WATER / OIL / GAS		

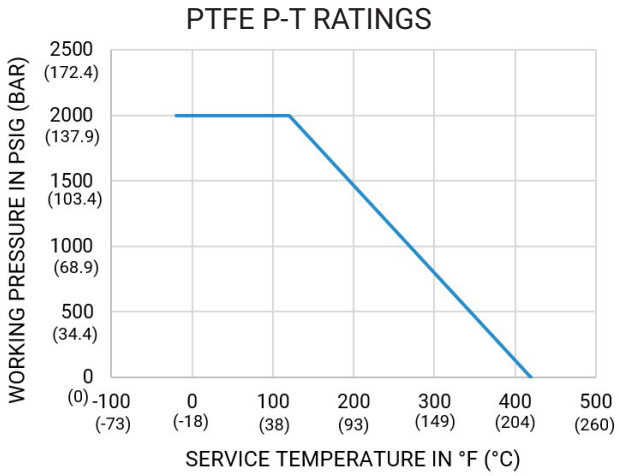

Evans Components Inc.
7606 SW Bridgeport Road, Portland, OR 97224 USA
Phone 971.249.1600 | Fax 971.249.1601
www.evanscomponents.com

EVANS COMPONENTS

Bill Of Materials

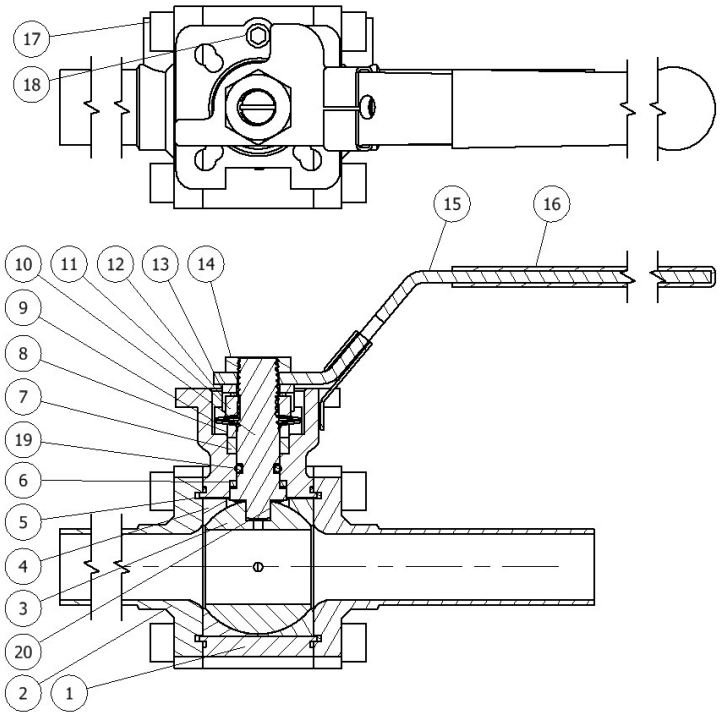

MATERIAL LIST			
ITEM	DESCRIPTION	MATERIAL	QTY
1	BODY	ASTM A351 CF8M	1
2	BODY CAP	ASTM A351 CF8M	2
3	BALL	ASTM A351 CF8M/316	1
4	SEAT	PTFE	2
5-1	BODY GASKET	GRAPHITE	1
5-2	BODY GASKET	PTFE	1
6-1	THRUST WASHER	GRAPHITE	1
6-2	THRUST WASHER	PTFE	1
7	STEM PACKING	GRAPHITE	1
8	GLAND	AISI 304	1
9	BELLEVILLE WASHER	AISI 301	2
10	STEM	ASTM A276 316	1
11	GLAND NUT	AISI 304	1
12	LOCK CLIP	AISI 304	1
13	SPRING WASHER	AISI 304	1
14	HANDLE NUT	AISI 304	1
15	HANDLE	AISI 304	1
16	SLEEVE	VINYL PLASTISOL	1
17	BODY BOLT	ASTM A193 B8	8-12
18	STOP PIN	AISI 304	1
19	STEM O-RING	EPDM*	1
20	ANTI-STATIC DEVICE	AISI 304	1

* Optional Viton O-ring (FRV Series), see ordering guide for more detail

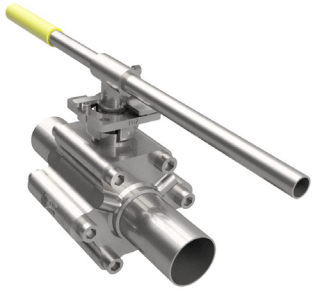

T-Bar Style Handle

(standard on 1.5” valves and above.)

Optional 100mm Long Stem Extension

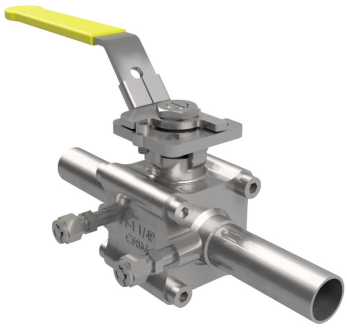

Optional Capped Compression Purge Ports

Optional Purge Valves

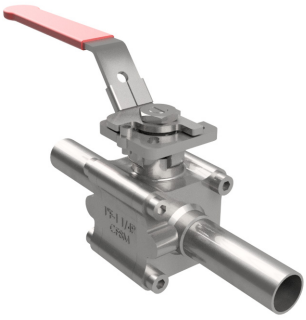

*** FRV Series valves come standard with Red Handle**

Evans Components Inc.
7606 SW Bridgeport Road, Portland, OR 97224 USA
Phone 971.249.1600 | Fax 971.249.1601
www.evanscomponents.com

EVANS COMPONENTS

Dimensions

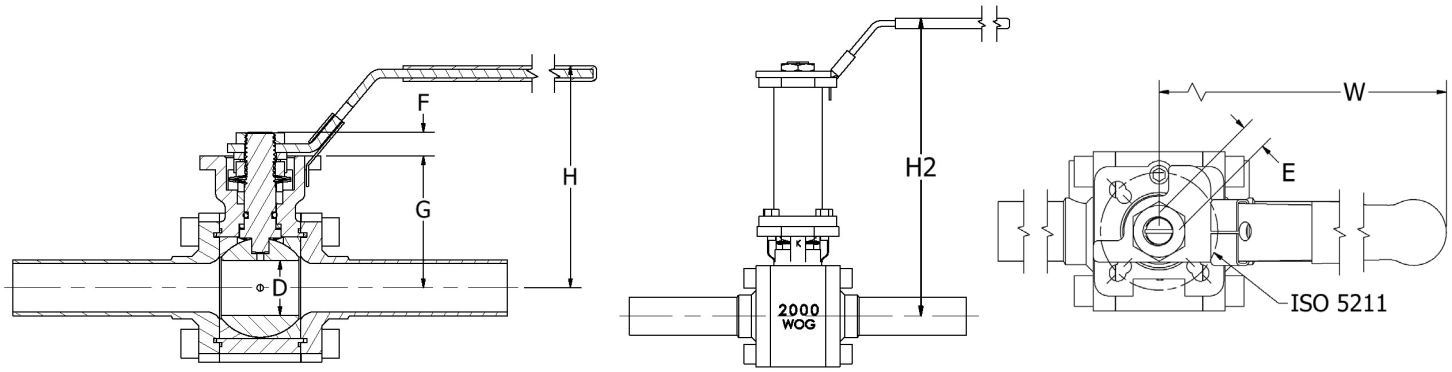

SIZE		Ø D	E	F	G	H	H2	W	ISO 5211	WEIGHT
IN	DN	IN / mm	IN / mm	IN / mm	IN / mm	IN / mm	IN / mm	IN / mm		LB / KG
1/4"	8	0.43 11	0.35 9	0.31 8	1.47 37.5	2.75 70	6.69 170	5.51 140	F04	2.4 1.1
3/8"	10	0.43 11	0.35 9	0.31 8	1.47 37.5	2.75 70	6.69 170	5.51 140	F04	2.4 1.1
1/2"	15	0.55 14	0.35 9	0.31 8	1.47 37.5	2.75 70	6.69 170	5.51 140	F04	2.4 1.1
3/4"	20	0.80 21	.043 11	0.43 11	1.96 52.0	3.54 90	7.48 190	7.08 180	F04-F05	3.5 1.6
1.0"	25	0.98 25	0.43 11	0.43 11	2.36 60.0	3.93 100	7.87 200	7.08 180	F04-F05	4.9 2.2
1.5"	40	1.45 37	0.55 14	0.67 17	2.99 76.0	4.52 115	8.46 215	8.46 215	F07	10.1 4.6
2.0"	50	1.96 50	0.55 14	0.67 17	3.66 93.0	5.23 133	9.17 233	8.46 215	F07	16.1 7.3
2.5"	65	2.56 65	0.87 22	0.94 24	4.59 116.5	6.81 173	10.75 273	18.11 460	F07-F10	29.5 13.4
3.0"	80	3.15 80	0.87 22	0.94 24	5.00 127.0	7.24 184	11.18 284	18.11 460	F07-F10	46.3 21.0
4.0"	100	3.94 100	1.06 27	1.14 29	6.26 159	9.53 242	13.46 342	18.11 460	F10	86.8 39.4

Evans Components Inc.
7606 SW Bridgeport Road, Portland, OR 97224 USA
Phone 971.249.1600 | Fax 971.249.1601
www.evanscomponents.com

EVANS FR SERIES

Tube Ends

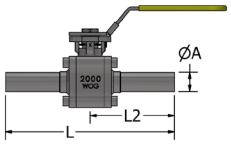

PART NUMBER	SIZE	Ø A	L	L2
	IN / mm	IN / mm	IN / mm	IN / mm
FR-04-04STRM-XX	1/4" 6.4	0.25 6.4	C/F	C/F
FR-06-06STRM-XX	3/8" 9.5	0.375 9.5	C/F	C/F
FR-08-08STRM-XX	1/2" 9.5	0.50 12.7	8.21 208.4	4.10 104.2
FR-12-12STRM-XX	3/4" 19.1	0.75 19.1	8.31 211.0	4.15 105.5
FR-16-16STRM-XX	1.0" 25.4	1.00 25.4	8.87 225.4	4.44 112.7
FR-24-24STRM-XX	1.5" 38.1	1.50 38.1	9.94 252.4	4.97 126.2
FR-32-32STRM-XX	2.0" 50.8	2.00 50.8	10.69 271.4	5.34 135.7
FR-48-48STRM-XX	3.0" 76.2	3.00 76.2	13.25 336.5	6.62 168.2
FR-64-64STRM-XX	4.0" 101.6	4.00 101.6	14.42 366.3	7.21 183.1

Pipe Ends

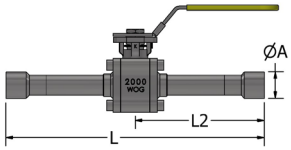

PART NUMBER	SIZE	Ø A	L	L2
	IN / mm	IN / mm	IN / mm	IN / mm
FR-04-04STRL-XX	1/4" 6.4	0.54 13.7	C/F	C/F
FR-06-06STRL-XX	3/8" 9.5	0.675 17.1	C/F	C/F
FR-08-08STRL-XX	1/2" 9.5	0.84 21.3	12.21 310.0	6.10 155.0
FR-12-12STRL-XX	3/4" 19.1	1.05 26.7	12.31 312.6	6.15 156.3
FR-16-16STRL-XX	1.0" 25.4	1.315 33.4	12.87 327.0	6.44 163.5
FR-24-24STRL-XX	1.5" 38.1	1.90 48.3	13.94 354.0	6.97 177.0
FR-32-32STRL-XX	2.0" 50.8	2.375 60.3	14.69 373.0	7.34 186.5
FR-48-48STRL-XX	3.0" 76.2	3.50 88.9	17.25 438.1	8.62 219.0
FR-64-64STRL-XX	4.0" 101.6	4.50 114.3	18.42 467.9	9.21 233.9

Compression Ends

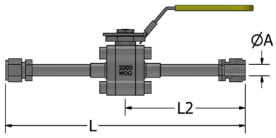

PART NUMBER	SIZE	Ø A	L	L2
	IN / mm	IN / mm	IN / mm	IN / mm
FR-04-04STRC-XX	1/4" 6.4	0.25 6.4	C/F	C/F
FR-06-06STRC-XX	3/8" 9.5	0.375 9.5	C/F	C/F
FR-08-08STRC-XX	1/2" 9.5	0.5 12.7	10.47 265.8	5.23 132.9
FR-12-12STRC-XX	3/4" 19.1	0.75 19.1	C/F	C/F
FR-16-16STRC-XX	1.0" 25.4	1.00 25.4	C/F	C/F
FR-24-24STRC-XX	1.5" 38.1	1.50 38.1	C/F	C/F
FR-32-32STRC-XX	2.0" 50.8	2.00 50.8	C/F	C/F

150 # ANSI Flange

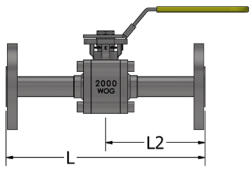

PART NUMBER	SIZE	L	L2
	IN / mm	IN / mm	IN / mm
FR-08-08STRU-XX	1/2" 9.5	9.18 233.2	4.59 116.6
FR-12-12STRU-XX	3/4" 19.1	9.25 234.9	4.62 117.4
FR-16-16STRU-XX	1.0" 25.4	9.94 252.5	4.97 126.2
FR-24-24STRU-XX	1.5" 38.1	11.28 286.6	5.64 143.3
FR-32-32STRU-XX	2.0" 50.8	12.31 312.7	6.16 156.3
FR-40-40STRU-XX	2.5" 63.5	14.00 355.6	7.00 177.8
FR-48-48STRU-XX	3.0" 76.2	15.21 386.3	7.60 193.1
FR-64-64STRU-XX	4.0" 101.6	16.24 412.4	8.12 206.2

Evans Components Inc.
7606 SW Bridgeport Road, Portland, OR 97224 USA
Phone 971.249.1600 | Fax 971.249.1601
www.evanscomponents.com

EVANS COMPONENTS

Part Number Matrix

Upstream — Downstream

EXAMPLE: FR - 08 - 08 STR M - XP - NC - 24V - LS - EX

1 - 2 - 3 4 5 - 6 - 7

Above part number describes a 1/2" stainless steel FR Series valve with 316SS tube extensions, a single downstream compression purge port, normally closed actuator, explosion proof 24v solenoid, explosion proof limit switch

1. Series (Material) Designator

FR - 316 Stainless Steel 1/4" - 4" (DN08—DN100) with EPDM O-ring stem seal
FRV - 316 Stainless Steel 1/4" - 4" (DN08-DN100) with Viton O-ring stem seal

2. Valve Size - IN.

04 - 1/4"
06 - 3/8"
08 - 1/2"
10 - 5/8"
12 - 3/4"
16 - 1"
24 - 1-1/2"
32 - 2"
40 - 2-1/2"
48 - 3"
64 - 4"

3. End Connection Size Designator - IN.

04 - 1/4"
06 - 3/8"
08 - 1/2"
10 - 5/8"
12 - 3/4"
16 - 1"
24 - 1-1/2"
32 - 2"
40 - 2-1/2"
48 - 3"
64 - 4"

4. Valve Assembly Pattern Designator

STR - Straight 2-way

5. Connection Type Designator

C - SS Compression Fitting
L - 316L SS Sch. 10 Pipe Extension
M - 316L SS Tube Extension
U - 150# ANSI Pipe Flange

6. Purge Port Designator (Upstream/Downstream)

(1/4" purge port: 1/4" - 2";
1/2" purge port: 3" and up)
X - No Purge Port
P - Capped Compression
FQ - Purge Valve w/ Plugged NPT

7. Options

NO - Normally Open Actuator - Spring Return
NC - Normally Closed Actuator - Spring Return
DA - Double Acting Actuator
24V-EX* - 24V Solenoid (Explosion Proof)
120V-EX* - 120V Solenoid (Explosion Proof)
230V-EX* - 230V Solenoid (Explosion Proof)
LS-EX - Limit Switch (Explosion Proof)
EXT-4.0 - 100mm stem extension
*(If both limit switch and solenioid are ordered, remove -EX after solenoid designator)

EX Limit Switch

Features/Specifications

- Explosion proof ATEX / IECEx / KC Ex d IIC
- Rugged aluminum die-cast housing
- Standard beacon, Open/Close indication
- NAMUR mounting shaft for pneumatic air operator
- Aluminum/powder-coated housing
- Operating temperature: -40F – 212F (-40C – 100C)

4" (100mm) Stem Extension Kit

FR-*-370F-EXT-4.0-KIT

- * Valve size (see 2 above)

EX Solenoid Valve

Features/Specifications

- Explosion proof ATEX, IP65, PTB
- Multi-million cycle life reliability. The innovative patented design and all composite construction means the V-Solenoid II is not affected by wear or corrosion.
- High airflow: Cv≥1.1
- NAMUR direct mounting, conforms to VDI/VDE 3845 standard
- Manual override standard
- Operating temperature: -4F – 140F (-20C – 60C)
- Operating pressure: 35 – 120 psi (2.4 - 8.3 bar)
- Voltage: 24VDC, 120VAC, 230VAC
- Valve body: Reinforced polyamide (PA)
- Port: ¼" NPT

Evans Components Inc.
7606 SW Bridgeport Road, Portland, OR 97224 USA
Phone 971.249.1600 | Fax 971.249.1601
www.evanscomponents.com

EVANS COMPONENTS

Air Actuator Specifications

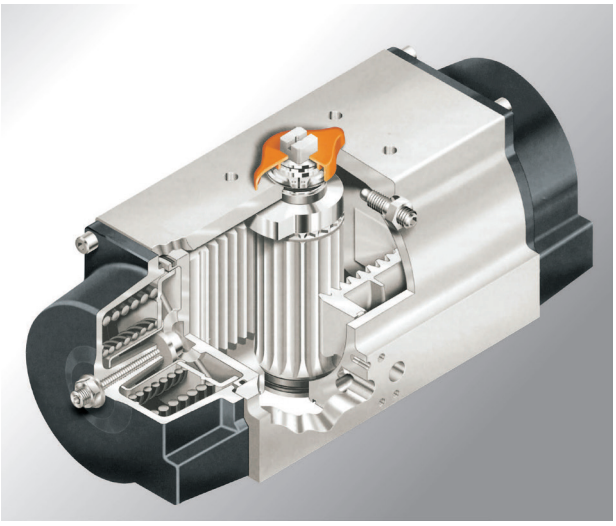

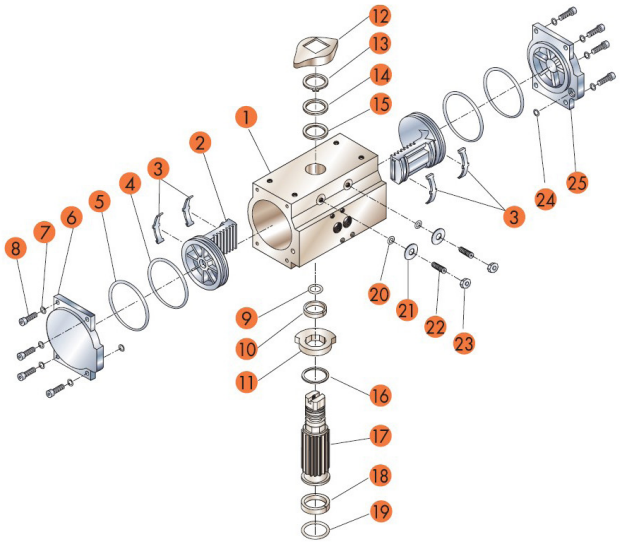

MATERIAL LIST	
NO.	MATERIAL
1	BODY: Extruded aluminum alloy (Hard anodized)
2	PISTONS: Die cast aluminum alloy
3	BEARING: Nylon
4	O-RING: Buna-N
5	O-RING: Buna-N
6	END CAP(L): Die cast aluminum alloy
7	WASHER: Stainless steel
8	CAP SCREW: Stainless steel
9	O-RING: Buna-N
10	BEARING: Nylon
11	STOP CAM: Sinteral steel
12	PISTON INDICATOR: Polyethylene
13	RETAINING RING: Stainless steel
14	WASHER: Stainless steel
15	BEARING: Nylon
16	RETAINING RING: Stainless steel
17	PINION: Carbon steel (Electro-less nickel plated)
18	BEARING: Nylon
19	O-RING: Buna-N
20	O-RING: Buna-N
21	WASHER: Stainless steel
22	NUT: Stainless steel
23	NUT: Stainless steel
24	O-RING: Buna-N
25	END CAP(R): Die cast aluminum alloy

Air Operated Actuator Performance

Operating Pressure Range - Double Acting: 40 to 120PSIG.

Operating Pressure Range - Spring Return: 60 to 120PSIG.

Maximum Allowable Working Pressure: 150PSIG.

Maximum Operating Pressure: 120PSIG

Operating Temperature Standard: -40°F to +200°F

*Air Inlet/Outlet connections: 1/4 BSP

Evans Components Inc.
7606 SW Bridgeport Road, Portland, OR 97224 USA
Phone 971.249.1600 | Fax 971.249.1601
www.evanscomponents.com

EVANS COMPONENTS

Learn more about related Evans Products

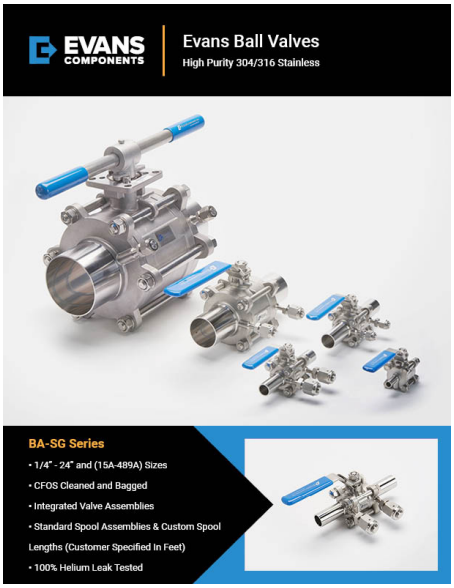

EVANS COMPONENTS

www.evanscomponents.com

7606 SW Bridgeport Road
Portland, Oregon 97224
Office 971.249.1600
Fax 971.249.1601

NOTE: Product availability and specifications contained herein are subject to change without notice.
Consult local distributor or factory for potential revisions.